NCTCOG
North Central Texas Council of Governments

iSWM

City of Azle

iSWM Criteria Manual for Site Development and Construction

Section 14 – City of Azle Subdivision Ordinance

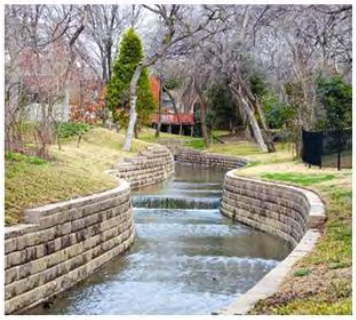

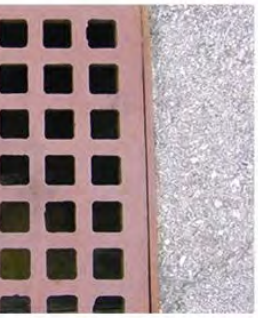

integrated Stormwater Management iSWM

City of Azle
Community & Opportunity

CITY OF AZLE

iSWM CRITERIA MANUAL FOR SITE DEVELOPMENT AND CONSTRUCTION

Incorporating the

Regional NCTCOG – Integrated Stormwater Management (iSWM) Manual for Site Development and Construction Criteria (2010 Edition)

August 2012

The City of Azle Local Criteria Manual adopts by reference the applicable regional iSWM sections that are required by the City's stormwater management program and includes additional design criteria that are not included in the iSWM Manual. The remaining iSWM sections and criteria are available for technical reference, utilization by developers for enhancement of land development projects and potential future adoption by the City, as needed.

Table of Contents

Foreword vi

14. 1.0 Overview of iSWM Criteria Manual 1

14.1.1 Introduction *1*

14.*1.2* integrated *Development Process* *4*

14.1.3 integrated Design Criteria *4*

14.*1.4* integrated *Construction Criteria* *7*

14.2.0 *integrated* Development Process 8

14.*2.1 Planning* *8*

14.*2.2 Steps in the Development Process* *8*

Step 1 – Review Local Requirements and Municipality Processes 10

Step 2 – Collect Data and Perform Site Analysis 10

Step 3 –Prepare Conceptual/Preliminary iSWM Plans 11

Step 4 – Prepare Final iSWM Plans and iSWM Construction Plan 13

Step 5 – Complete Operations and Maintenance Plan 14

14.3.0 *integrated* Design Criteria 16

14.*3.1 Hydrologic Methods* *16*

14.3.1.1 Types of Hydrologic Methods 16

14.3.1.2 Rainfall Estimation 22

14.*3.2 Water Quality Protection* *22*

14.3.2.1 Introduction 22

14.3.2.2 Option 1: integrated Site Design Practices and Credits 22

14.3.2.3 Option 2: Treat the Water Quality Protection Volume 27

14.3.2.4 Option 3: Assist with Off-Site Pollution Prevention Programs and Activities 30

14.*3.3 Acceptable Downstream Conditions* *30*

14.*3.4 Streambank Protection* *32*

14.*3.5 Flood Mitigation* *33*

14.3.5.1 Introduction 33

14.3.5.2 Flood Mitigation Design Options 33

14.*3.6 Stormwater Conveyance Systems* *34*

14.3.6.1 Introduction 34

14.3.6.2 Hydraulic Design Criteria for Streets and Closed Conduits 34

Streets and Stormwater Inlets 35

Storm Drain Pipe Design 38

14.3.6.3 Hydraulic Design Criteria for Structures 42

Open Channels 42

Vegetative Design 48

Culverts 49
Bridges 51
Detention Structures ... 52
Outlet Structures ... 54
Energy Dissipation ... 55
14.*3.7 Easements, Plats, and Maintenance Agreements* ... *56*
14.*3.8 Stormwater Control Selection* ... *59*
14.3.8.1 Control Screening Process ... 59
14.4.0 *integrated* Construction Criteria ... 73
14.*4.1 Applicability* ... *73*
14.*4.2 Introduction* ... *73*
14.*4.3 Criteria for BMPs during Construction* ... *74*
14.4.3.1 Erosion Controls ... 75
14.4.3.2 Sediment Controls ... 77
14.4.3.3 Material and Waste Controls ... 78
14.4.3.4 Installation, Inspection and Maintenance ... 80
14.5.0 Additional Local Requirements ... 81
14.*5.1 Goals and Objectives of the City of Azle Stormwater Management Program* ... *81*
14.5.1.1 Program Goals ... 81
14.5.1.2 Planning and Design Objectives ... 81
14.5.1.3 Design Guidelines ... 81
14.*5.2 Hydrologic Method Criteria* ... *83*
14.5.2.1 Hydrograph Method Computation Sheet ... 83
14.*5.3 Hydraulic Design of Street and Closed Conduits* ... *85*
14.5.3.1 Stormwater Inlets Computation Sheets ... 85
14.5.3.2 Minor Head Losses at Structures ... 91
14.5.3.3 Storm Drain Design Examples ... 95
14.5.3.4 General Construction Standards ... 99
14.*5.4 Hydraulic Design of Culverts, Bridges, Open Channels, and Detention Structures* ... *101*
14.5.4.1 Stone Rip Rap Design – Gregory Method Results Table ... 101
14.*5.5 Storm Water Facility Maintenance Agreements* ... *102*
14.*5.6 Single Family Residential Lot Drainage Site Grading* ... *105*
Appendix A – City of Azle Detailed Checklists and Forms ... 106
Appendix B – City of Azle Stormwater Computer Models ... 131
Appendix C – Sediment and Erosion Control Guidelines for Small Sites ... 132
Appendix D – Single Family Residential Lot Drainage ... 134

List of Tables

Table	Name	Page
14.1.1	iSWM Applicability	2
14.1.2	Storm Events	6
14.1.3	Summary of Options for Design Focus Areas	7
14.3.1	Applications of the Recommended Hydrologic Methods	18
14.3.2	Constraints on Using Recommended Hydrologic Methods	19
14.3.2A	Runoff Coefficients	21
14.3.3	Integration of Site Design Practices with Site Development Process	24
14.3.4	*integrated* Site Design Point Requirements	25
14.3.5	Point System for *integrated* Site Design Practices	26
14.3.6	Suitability of Stormwater Controls to meet *integrated* Focus Areas	30
14.3.7	Flow Spread Limits	38
14.3.8	Desirable Velocity in Storm Drains	40
14.3.9	Access Manhole Spacing Criteria	40
14.3.9A	Minimum Grades for Storm Drains	41
14.3.9B	Manning's Coefficients for Storm Drain Conduits	42
14.3.10	Roughness Coefficients (Manning's n) and Allowable Velocities for Natural Channels	48
14.3.11	Maximum Velocities for Vegetative Channel Linings	49
14.3.12	Classification of Vegetal Covers as to Degrees of Retardance	50
14.3.13	Recommended Loss Coefficients for Bridges.	53
14.3.14	Closed Conduit Easements	58
14.3.15	Stormwater Treatment Suitability	64
14.3.16	Water Quality Performance.	65
14.3.17	Site Applicability	66
14.3.18	Implementation Considerations	67
14.3.19	Physiographic Factors	69
14.3.20	Soils	70
14.3.21	Special Watershed Considerations	71
14.3.22	Location and Permitting Checklist	72
14.4.1	Requirements for Materials and Wastes.	80
14.5.1	Junction or Structure Coefficient of Loss	92
14.5.2	Head Loss Coefficients Due To Obstructions	93
14.5.3	Head Loss Coefficients Due to Sudden Enlargements and Contractions	93
14.5.4	Rock Riprap Sizing – Gregory Method	103
14.5.5	Rock Riprap Sizing – Culvert Outfall Protection	103

List of Figures

Figure	Name	Page
14.1.1	iSWM Applicability Flowchart	3
14.1.2	City of Azle Review Process for Land Disturbance Activities	4
14.2.1	iSWM Flowchart	10
14.3.1A	Sample Calculation Sheet for Runoff Coefficient “C”	22
14.5.1	Computation Sheet – Hydrology by Unit Hydrograph Method	85
14.5.2	Computation Sheet for Curb Opening and Drop Inlets	87
14.5.3	Inlets on Grade with Gutter Depression.	90
14.5.4	Computation Sheet for On Grade Curb Inlet	91
14.5.5	Minor Head Losses at Structures (1 of 2)	94
14.5.6	Minor Head Losses at Structures (2 of 2)	95
14.5.7	Computations Sheet for Storm Drains	97
14.5.8	Well-Graded, “Dry” Detention Basin	103
14.5.9	Schematic Flow for Simple Detention Basin	105
14.5.10	Checklist for Simple Detention Basin	106
14.5.11	Grading Requirements Next to Building Foundation	107

FOREWORD

Adoption of Manual by City of Azle

This Criteria Manual for Site Development and Construction is adopted and becomes effective on September 1, 2012.

Purpose and Limitations of Manual

This manual is intended to provide a guideline for the most commonly encountered stormwater or flood control designs in the City of Azle. Also, it's a guide for watershed master plans and for design of remedial measures for existing facilities. This manual was developed for users with knowledge and experience in the applications of standard engineering principles and practices of stormwater design and management. There will be situations not completely addressed or covered by this manual. Any variations from the practices established in this manual must have the expressed written approval of the Storm Water Manager. Close coordination with city staff is recommended and encouraged during the planning, design and construction of all stormwater facilities.

Goals and Objectives for Stormwater Management

A proper understanding of the City's adopted goals and objectives for storm water management, as summarized in Chapter 5, is essential for the proper application of this Manual.

Contact Information

Information on Azle's Stormwater management program and policies can be obtained at: 817-444-4511 or at the website: www.cityofazle.org. For additional information on the iSWM regional manual and program, contact the North Central Texas Council of Governments (NCTCOG) at 817-695-9191 or at the website http://iSWM.nctcog.org/.

Abbreviations and Definitions

For convenience, two terms which are used frequently throughout this manual are abbreviated:

- CITY OF AZLE- City of Azle
- SWM – Storm Water Manager

Several stormwater and development terms are used in this manual which have unique or special meanings. They are defined below:

1. **Adequate Outfall** - Outfall that does not create adverse flooding or erosion conditions downstream and is in all cases subject to the approval of the Storm Water Manager.
2. **BMP or Best Management Practice** – A physical, chemical, structural, or managerial practice or device that prevents, reduces, or treats the pollution of stormwater, or reduces or treats erosion, or minimizes runoff.
3. **Development -** A contiguous tract of land (or a tract of land separated only by roadway and/or drainage right-of-way or easements) to be considered as a single development for purposes of this policy. Development - A contiguous tract of land (or a tract of land separated only by roadway and/or drainage rights-of-way or easements) to be considered as a single development for purposes of this policy, if the tract has one or more of the following characteristics:
    - Included in a single Concept Plan submitted to the City of Azle,
    - Included in a single Preliminary Plat submitted to the City of Azle,
    - Is comprised of contiguous land (or land separated only by a roadway and/or drainage rights-of-way or easements) under the same root ownership,

- Is encumbered by a single Master Drainage Study or Plan,
- Is encumbered by a single Developer's Agreement, TIF, 360 Agreement or other public/private partnership agreement,
- Is overlaid by a common Homeowner's or Property Owner's Association (HOA, POA), or
- Is owned or managed by a common Master Developer.

4. **Drainage Study** - Studies of the proposed development and drainage areas, including a downstream assessment will accompany the conceptual, preliminary, and final site plans and will include the necessary hydrologic and hydraulic analysis to clearly demonstrate that the limits of the Zone of Influence have been identified.
5. **Downstream Assessment -** Downstream assessment of properties that could be impacted by the development.
6. **Engineer or Engineer of Record** – The person authorized to practice engineering in Texas who is responsible for preparing engineering plans for a development.
7. **Fully Developed Conditions** – For watershed hydrology, fully developed conditions include all existing developed areas and all existing undeveloped areas shall reflect anticipated future land use designated by zoning classification.
8. **Grading Permit** – The approval by the City of Azle to proceed with the disturbance of 0.1 acres or more, after review and approval of iSWM, , Floodplain, or other City regulations.
9. **iSWM Construction Plan** – A plan and notes indicating the installation and maintenance of BMPs and application of pollution prevention procedures used to control erosion, sediment, construction materials, and waste during the construction phase of improvements in conformance with the criteria contained in this Manual.
10. **iSWM Plan or iSWM Site Plan** – A stormwater management plan that conforms to the criteria contained in this Manual.
11. **Maintenance Plan or Operations and Maintenance Plan**- A plan prepared in accordance with this Manual for the purpose of describing maintenance and operational requirements of a structural BMP and interchangeably used with the "City of Azle Stormwater Facility Maintenance Plan"
12. **Natural Creeks** – Those drainage ways that are generally unimproved, that often exhibit a meandering course, and which are not proposed to be improved to City standards for earthen channels.
13. **Private Water** – Runoff water which generated on private property and flowing within the property or from one property to another. Drainage easements and drainage facilities which contain only private water shall not be maintained by the City.
14. **Public Water** – The concentration of surface water flowing through or from public land or right-of-way. Public water must be contained within a dedicated right-of-way, floodplain or drainage easement.
15. **Stormwater Fee Credits** – An incentive provided by the City of Azle to encourage the voluntary use of BMPs which improve stormwater management.
16. **Stormwater Facility Maintenance Agreement or Maintenance Agreement** – A legal agreement between the City of Azle and a property owner for perpetual maintenance of a structural BMP.
17. **Stormwater Pollution Prevention Plan or SWPPP** – The site design, operations, and inspections plan required by the Environmental Protection Agency (EPA) and the Texas council on Environmental Quality (TCEQ) for the control of erosion and sediment during construction. The iSWM Construction Plan covers much of the site design requirements required by the SWPPP.
18. **Zone of Influence** - A "zone of influence" from a proposed development extends to a point downstream where the discharge from a proposed development no longer has a significant impact upon the receiving stream or storm drainage system.

Overview of the iSWM Program

The iSWM Program for Construction and Development is a cooperative initiative that assists municipalities and counties to achieve their goals of water quality protection, streambank protection, and flood mitigation, while also helping communities meet their construction and post-construction obligations under state stormwater permits.

Development and redevelopment by their nature increase the amount of imperviousness in our surrounding environment. This increased imperviousness translates into loss of natural areas, more sources for pollution in runoff, and heightened flooding risks. To help mitigate these impacts, more than 60 local governments are cooperating to proactively create sound stormwater management guidance for the region through the *integrated* Stormwater Management (iSWM) Program.

The iSWM Program is comprised of four types of documentation and tools as shown in Figure 1. These are used to complement each other and to support the development process.

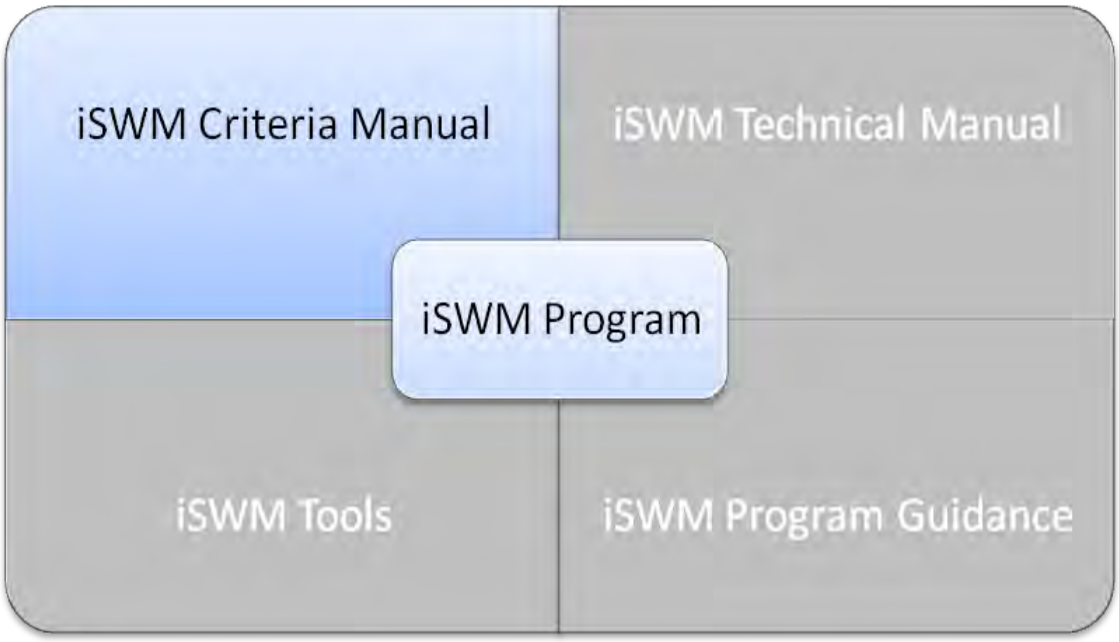

Figure 1: iSWM Program Support Documents and Tools

The four parts of iSWM are:

iSWM Criteria Manual –This document provides a description of the development process, the iSWM focus areas and locally adopted design criteria allowing municipalities a flexible approach to apply at a local level.

iSWM Technical Manual – This set of document provides technical guidance including equations, descriptions of methods, fact sheets, etc. necessary for design.

iSWM Tools – This includes web-served training guides, examples, design tools, etc. that could be useful during design.

iSWM Program Guidance – This includes reference documents that guide programmatic planning rather than technical design.

14.1.0 Overview of iSWM Criteria Manual

This Chapter discusses the criteria aspects of iSWM and lays out the framework and specific requirements. Local governments may modify this section to meet any local provisions.

14.1.1 Introduction

The purpose of this manual is to provide design guidance and a framework for incorporating effective and environmentally sustainable stormwater management into the site development and construction processes and to encourage a greater regional uniformity in developing plans for stormwater management systems that meet the following goals:

- Control runoff within and from the site to minimize flood risk to people and properties;
- Assess discharges from the site to minimize downstream bank and channel erosion; and
- Reduce pollutants in stormwater runoff to protect water quality and assist communities in meeting regulatory requirements.

Following criteria provided in the manual will help to meet sustainable development goals. There are many ways that sustainable development may be achieved while following these criteria. For example, a development that reduces individual lot imperviousness and a development that has high lot density in one area and a large open space in another can both meet sustainable requirements.

Chapter Summary

The iSWM Criteria Manual consists of five chapters:

Chapter 1 – Introduction and Summary

Chapter 2 – integrated Development Process

Chapter 3 – integrated Design Criteria

Chapter 4 – integrated Construction Criteria

Chapter 5 – Additional Local Provisions

Local Provision Boxes

Throughout this manual you will notice “Local Provision” boxes. These boxes are used by a local government to add, delete, or modify sections of the criteria and specify the options allowed and/or required by the local government. Additional local information can be added and will be located in Chapter 5.

Local Provisions:

Relationship of Azle and NCTCOG Regional integrated Stormwater Management (iSWM) Manuals

This City of Azle’s iSWM Criteria Manual incorporates the 2010 regional iSWM Criteria Manual, developed by the North Central Texas Council of Governments (NCTCOG), although portions of the manual may have been modified or removed by the City. The requirements contained within the Local Provision sections shall take precedence over conflicting provisions that may be contained in the iSWM Criteria Manual and iSWM Technical Manual approved by the North Central Texas Council of Governments.

Chapter 5 contains additional criteria that are applicable in the City of Azle.

The digital version of both manuals cross reference each other and are included on the respective websites for the City of Azle (www.cityofazle.org) and NCTCOG (http://iSWM.nctcog.org/). Copies of these documents can be downloaded from the website.

Precedence of Azle Criteria
The requirements contained within the Local Provision sections shall take precedence over conflicting provisions that may be contained in the iSWM Criteria Manual and iSWM Technical Manual approved by the North Central Texas Council of Governments.

Applicability

iSWM is applicable under the following conditions for development and redevelopment that will ultimately disturb one or more acres as illustrated below and in Figure 1.1:

Table 14.1.1 iSWM Applicability

Applicable for iSWM Site Design:	Applicable for iSWM Construction:
Land disturbing activity of 1 acre or more OR land disturbing activity of less than 1 acre where the activity is part of a common plan of development that is one acre or larger.	Land disturbing activity of 1 acre or more OR land disturbing activity of less than 1 acre where the activity is part of a common plan of development that is one acre or larger.

A common plan of development consists of construction activity that is completed in separate stages, separate phases, or in combination with other construction activities.

Development and redevelopment are not specifically defined in this manual. The applicability is based on land disturbance activities. If an existing site has been cleared and graded, but not developed, within five years of the date of the developer's initial application submittal, the developer must consider the land conditions prior to the clearing and grading to be the existing site conditions.

New development or redevelopment in critical or sensitive areas, or as identified through a watershed study or plan, may be subject to additional performance and/or regulatory criteria as specified by the local government. Furthermore, these sites may need to utilize certain structural controls in order to protect a special resource or address certain water quality or drainage problems identified for a drainage area or watershed.

Site Design below Applicable Criteria

Site developments that do not meet the applicability requirements are not subject to the regulatory water quality or stream bank protection requirements. However, it is recommended that these criteria still be used and that temporary controls be provided during construction. Flood mitigation and conveyance criteria still apply. The planning process is also simplified for sites below the applicable criteria to an optional pre-development review before the final submittal of the engineering plans.

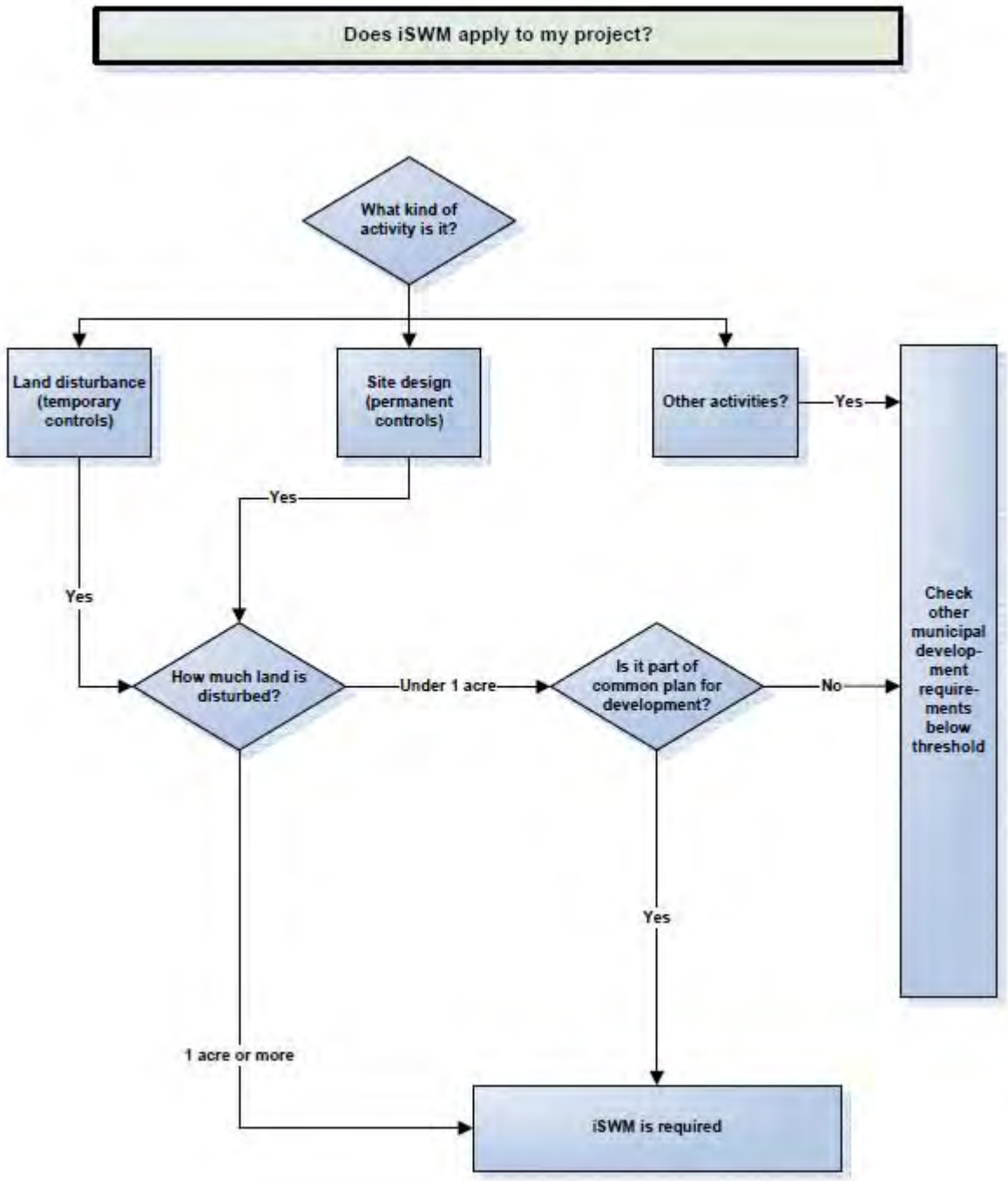

Figure 1.1 iSWM Applicability Flowchart

Local Provisions: Azle requirements for storm water management review are shown in greater detail in the graphic below. Any land disturbances of 0.1 acre or more will be reviewed for known drainage problems and mapped floodplains; a site plan showing topography and drainage information is generally sufficient for this purpose. A land disturbance of 1.0 acres or more requires an iSWM Site Plan prepared by a professional engineer. A land disturbance of 1 acre or more also requires a Construction Site Notice (CSN) or Notice of Intent (NOI) as applicable, along with a Storm Water Pollution Prevention Plan (SWPPP) that shows how erosion will be controlled during construction. Landscaping (Section 29), Land Filling, and other City code requirements that are often triggered by land disturbance activities should also be checked.

A Grading Permit must be approved by the City prior to the commencement of any construction or grading activities disturbing 0.1 acres or more of land or if disturbed surface areas are located within Floodplain and/or Drainage Easement. Grading requirements will be reviewed as part of the normal engineering review process rather than as a separate step. After construction and grading activities are complete and disturbed surfaces are stabilized, and prior to the issuance of the Certificate of Occupancy, a Final Grading Certificate must be provided by an engineer or the contractor. A separate grading permit for the grading of individual Single Family or Duplex Building lots will normally not be required if those lots are part of a subdivision plat recorded prior to the date of this ordinance.

14.1.2 *integrated* Development Process

Chapter 2 of this manual presents details for completing the full iSWM development process which consists of five steps. Each of the steps builds on the previous steps to result in Final iSWM Plans and Construction Plans.

Step 1 – Review Local Requirements and Municipality's Processes

Step 2 – Collect Data and Perform Site Analysis

Step 3 – Prepare Concept/Preliminary iSWM Plans

Step 4 – Prepare Final iSWM Plans and iSWM Construction Plan

Step 5 – Prepare Operation and Maintenance Plans

Local Provisions: NONE

14.1.3 *integrated* Design Criteria

Chapter 3 of this manual presents an *integrated* approach for meeting stormwater runoff quality and quantity management goals by addressing the key adverse impacts of development on stormwater runoff. Its framework consists of three focus areas, each with options in terms of how the focus area is applied.

Design Focus Areas

The stormwater management focus areas and goals are:

- **Water Quality Protection:** Remove pollutants in stormwater runoff to protect water quality
- **Stream bank Protection:** Regulate discharge from the site to minimize downstream bank and channel erosion
- **Flood Mitigation and Conveyance:** Control runoff within and from the site to minimize flood risk to people and properties for the conveyance storm as well as the 100-year storm.

Each of the Design Focus Areas must be used in conjunction with the others to address the overall stormwater impacts from a development site. When used as a set, the Design Focus Areas control the entire range of hydrologic events, from the smallest runoff-producing rainfalls up to the 100-year, 24-hour

storm.

Local Provisions: Water Quality is required by the City of Azle

Design Storms

Integrated design is based on the following four (4) storm events.

Table 14.1.2 Storm Events

Storm Event Name	Storm Event Description
"Water Quality"	Criteria based on a volume of 1.5 inches of rainfall, not a storm frequency
"Stream bank Protection"	1-year, 24-hour storm event
"Conveyance"	25-year, 24-hour storm event
"Flood Mitigation"	100-year, 24-hour storm event

Throughout the manual the storms will be referred to by their storm event names.

Local Provisions: The adopted "Stream bank Protection", "Conveyance", and "Flood Mitigation" storm events for the City of Azle are the 1-, 10-, and 100-year, 24-hour storm events, respectively.

Design Focus Area Application Options

There are multiple options provided to meet the required criteria for water quality protection, stream bank protection, and flood mitigation. These design options are summarized in Table 1.3.

Design criteria for stream bank protection and flood mitigation are based on a **downstream assessment**. The purpose of the downstream assessment is to protect downstream properties and channels from increased flooding and erosion potential due to upstream development. A downstream assessment is required to determine the extent of improvements necessary for stream bank protection and flood mitigation. Downstream assessments shall be performed for stream bank protection, conveyance, and flood mitigation storm events. More information on downstream assessments is provided in Section 3.3.

If a development causes no adverse impacts to existing conditions, then it is possible that little or no mitigation would be required.

Table 14.1.3 Summary of Options for Design Focus Areas

Design Focus Area	Reference Section	Required Downstream Assessment	Design Options
Water Quality Protection	3.2	yes	**Option 1:** Use *integrated* Site Design Practices for conserving natural features, reducing impervious cover, and using the natural drainage systems
			Option 2: Treat the Water Quality Protection Volume (WQ_V) by reducing total suspended solids from the development site for runoff resulting from rainfalls of up to 1.5 inches (85th percentile storm)
			Option 3: Assist in implementing off-site community stormwater pollution prevention programs/activities as designated in an approved stormwater master plan or TPDES Stormwater permit
Stream bank Protection	3.4	yes	**Option 1:** Reinforce/stabilize downstream conditions
			Option 2: Install stormwater controls to maintain or improve existing downstream conditions
			Option 3: Provide on-site controlled release of the 1-year, 24-hour storm event over a period of 24 hours (Stream bank Protection Volume, SP_V)
Flood Mitigation and Conveyance	3.5 and 3.6	yes	**Flood Mitigation** **Option 1:** Provide adequate downstream conveyance systems
			Option 2: Install stormwater controls on-site to maintain or improve existing downstream conditions
			Option 3: In lieu of a downstream assessment, maintain existing on-site runoff conditions
			Conveyance Minimize localized site flooding of streets, sidewalks, and properties by a combination of on-site stormwater controls and conveyance systems

Local Provisions: Water Quality is required by the City of Azle

14.1.4 *integrated* Construction Criteria

Chapter 4 of this manual presents an *integrated* approach for reducing the impact of stormwater runoff from construction activities on downstream natural resources and properties. The purpose is to provide design criteria for temporary controls during construction that protect water quality by:

- Preventing soil erosion;
- Capturing sediment on-site when preventing erosion is not feasible due to construction activities; and
- Controlling construction materials and wastes to prevent contamination of stormwater.

Temporary controls to protect water quality are known as Best Management Practices (BMPs). The design of the BMPs is to be coordinated with and done at the same time as the Preliminary and Final iSWM Plans. Construction BMPs complement and work with the site grading and drainage infrastructure.

Erosion Control BMPs are designed to minimize the area of land disturbance and to protect disturbed soils from erosion. Protection can be accomplished by diverting stormwater away from the disturbed area or by stabilizing the disturbed soil. Erosion control BMPs are most important on disturbed slopes and channels where the potential for erosion is greatest. The design of erosion control BMPs must be coordinated with related grading, drainage and landscaping elements. (e.g. channel armoring, velocity dissipaters, etc.)

Sediment Control BMPs are temporary structures or devices that capture soil transported by stormwater. The BMPs are designed to function effectively with the site drainage patterns and infrastructure. An effective design ensures that the sediment control BMPs do not divert flow or flood adjacent properties and structures. Some types of permanent drainage structures, such as detention and retention basins, can also be designed to function as a sediment control BMP during construction.

Material and Waste Control BMPs prevent construction materials and wastes from coming into contact with and being transported by stormwater. These BMPs consist of a combination of notes to direct contractor and temporary construction controls.

The iSWM Construction Criteria are the minimum requirements for temporary controls during construction. The state permit and requirements for stormwater discharges associated with construction activities must also be followed. More information on state requirements is provided in Section 4.2.

Local Provisions: NONE

14.2.0 *integrated* Development Process

This Chapter discusses the five-step development process. Local governments will integrate these processes into their current process by the addition of local provisions.

14.2.1 Planning

A formal *integrated* Stormwater Management Development Process shall be implemented to meet the stormwater management goals and to see that local stormwater guidelines and requirements are implemented. The process shall include the steps, meetings, and documents that must be met by the developer. The five-step process described herein includes the following:

- The iSWM Plans: The iSWM Plans are the documents that summarize the data collected in steps 1 and 2 and are shown on the conceptual/preliminary and final plans that must be submitted to the municipality as part of steps 3, 4, and 5. Each submittal must follow the criteria outlined in Chapters 2 and 3. Submittals shall include information in accordance with the checklists that are included in Chapter 5.
- The iSWM Construction Plan: The iSWM Construction Plan is the document that uses data collected in steps 1 and 2 to protect water quality during construction. It is submitted to the municipality with the Final iSWM Plans in Step 4. An overview of the iSWM construction plan content is covered in Section 2.2. More detailed criteria for the iSWM Construction Plan are outlined in Chapter 4.

The iSWM Plans and iSWM Construction Plan are a subset of the overall development process that occurs throughout the planning and development cycle of a project and then continues after construction is completed via regular inspection and maintenance of the stormwater management system.

In addition to these plans, stormwater master plans are an important tool used to assess and prioritize both existing and potential future stormwater problems and to consider alternative stormwater management solutions. Local governments may have individual watershed plans, or several governments may work cooperatively to develop a unified approach to watershed planning, development controls, permit compliance, multi-objective use of floodplain and other areas, and property protection. Refer to the Local Provisions in Step 1 under Section 2.2 where regional approaches (if any) are identified.

Local Provisions: Conceptual, preliminary, and final iSWM Site Plans and supporting technical data will be submitted for review and approval to the City of Azle.

14.2.2 Steps in the Development Process

This section describes the typical contents and general procedure for preparing iSWM Plans and the iSWM Construction Plan. The level of detail involved in the plans will depend on the project size and the individual site and development characteristics. Figure 2.1 lays out the five-step process. Each of the following steps builds on the previous steps to result in the Final iSWM Site and Construction Plans:

Step 1 – Review Local Requirements and Municipality's Processes

Step 2 – Collect Data and Perform Site Analysis

Step 3 – Prepare Concept/Preliminary iSWM Plans

Step 4 – Prepare Final iSWM Plans and iSWM Construction Plan

Step 5 – Prepare Operation and Maintenance Plans

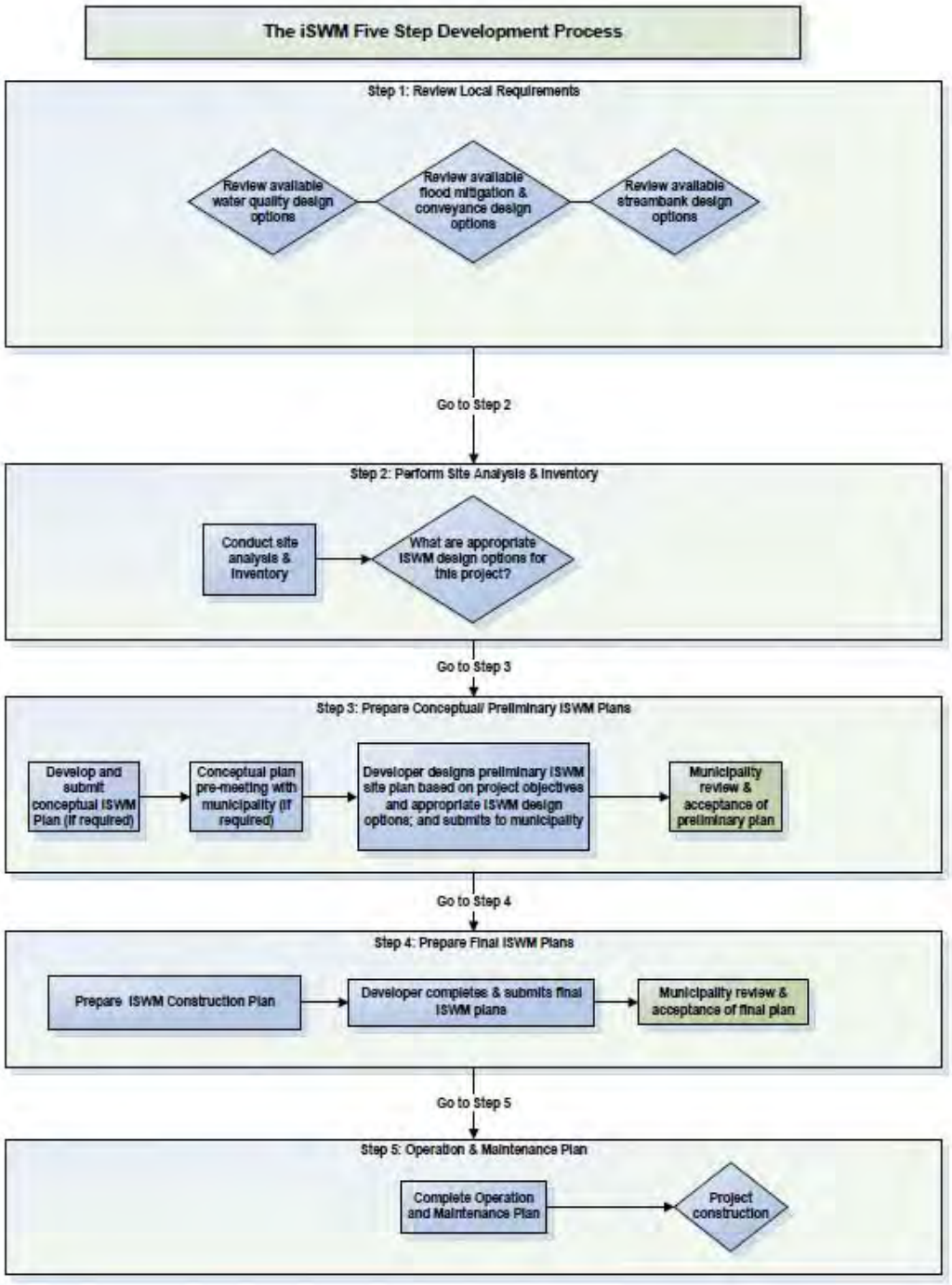

Figure 14.2.1 iSWM Flowchart

Local Provisions: Prior to Certificate of Occupancy being issued, a Final Grading Certificate prepared by an engineer or the contractor, as appropriate shall be submitted. The Final Grading Certificate shall state that the site grading and drainage improvements are constructed in substantial compliance with the approved plans. If the improvements were not constructed in substantial compliance with the plans, appropriate documentation shall be provided to substantiate any changes. If changes were made to public facilities, the City shall require an engineer to document field changes by submitting certified as-built plans.

Step 1 – Review Local Requirements and Municipality Processes

The site developer shall become familiar with the local stormwater management, development requirements and design criteria that apply to the site. These requirements include:

- iSWM Criteria Manual for Site Development and Construction (this manual including all local provisions)
- Available online iSWM Program documents
    - iSWM Technical Manual
    - iSWM Tools
    - iSWM Program Guidance
- State and Federal Regulatory Requirements
- Other Local Municipal Ordinances and Criteria
    - Platting Procedures
    - Zoning Requirements
    - Development Codes and Procedures
    - Tree and Landscape Requirements
    - Special Use Permits
    - Drainage Master Plans and Watershed Plans
    - Erosion Control Plans
    - Floodplain Ordinances
    - Grading Plan Requirements
    - Construction/Building Permit Notifications and Requirements

Information regarding the above items can be obtained from this manual or at a pre-submittal (or similar) meeting with the municipality.

A critical part of any project involves the proposed development working closely with various departments within the municipality. Integrating the stormwater practices with other regulatory requirements will promote a sustainable development.

Opportunities for special types of development (e.g., clustering) or special land use opportunities (e.g., conservation easements or tax incentives) must be investigated. In addition, there may be an ability to partner with a local community for the development of greenways or other riparian corridor or open space developments.

All applicable State and Federal regulatory requirements must be met.

Local Provisions: NONE

Step 2 – Collect Data and Perform Site Analysis

Using field and mapping techniques approved by the municipality, the site engineer shall collect and review information on the existing site conditions and map the following site features:

- Topography
- Drainage patterns and basins
- Intermittent and perennial streams on-site and off-site waters that will receive discharges from the proposed development
- Soil types and their susceptibility to erosion
- Ground cover and vegetation, particularly unique or sensitive vegetation areas to be protected during development
- Existing development
- Property lines, adjacent areas and easements
- Wetlands and critical habitat areas
- Boundaries of wooded areas and tree clusters
- Floodplain boundaries
- Steep slopes
- Required buffers and setbacks along water bodies
- Proposed stream crossing locations

- Existing stormwater facilities on-site and off-site facilities that will receive discharges from the proposed development
- Other required protection areas

The site analysis shall be summarized in the conceptual/preliminary iSWM Plans along with any other supporting documents. The data collected and analyzed during this step of the development process shall be used as the starting point for preparing the iSWM Plans and the iSWM Construction Plan.

Local Provisions: NONE

Step 3 –Prepare Conceptual/Preliminary iSWM Plans

Conceptual iSWM Plan

Based on the review of existing conditions and site analysis, the design engineer shall develop and submit a Conceptual iSWM Plan for the project. The Conceptual iSWM Plan allows the design engineer to propose a potential site layout and gives the developer and local review authority a "first look" at the stormwater management system for the proposed development.

The following steps shall be followed in developing the Conceptual iSWM Plan with the help of the Checklist for Conceptual iSWM Plans found in Chapter 5 of this manual:

1. Use integrated Site Design Practices (Section 3.2.2) as applicable to develop the site layout, including:
   - Preserving the natural feature conservation areas defined in the site analysis
   - Fitting the development to the terrain and minimizing land disturbance
   - Reducing impervious surface area through various techniques
   - Preserving and utilizing the natural drainage system wherever possible
2. Determine the credits for integrated Site Design (Section 3.2.2) and water quality volume reduction (Section 3.2.3) as applicable, to be accounted for in the design of structural and non-structural stormwater controls on the site.
3. Calculate conceptual estimates of the locally required focus area design requirements for water quality protection, stream bank protection, and flood mitigation (Sections 3.2, 3.4, 3.5) based on the conceptual plan site layout.
4. Perform screening and conceptual selection of appropriate temporary and permanent structural stormwater controls (Section 3.8 and Section 4.0) and identification of potential site locations.

It is extremely important at this stage that stormwater system design is integrated into the overall site design concept in order to best and most cost-effectively reduce the impacts of the development as well as provide for the most cost-effective and environmentally sensitive approach. Using hydrologic calculations, the goal of mimicking pre-development conditions can serve a useful purpose in planning the stormwater management system.

Local Provisions: Conceptual iSWM Site Plans shall be prepared and submitted to the City of Azle in the initial planning stages of a land development project with a Conceptual iSWM Site Plan. In general, the engineer and planner will follow the conceptual iSWM Site Plan guidelines as presented in Section 2.2 Step 3, as applicable to Azle. Water quality and stream bank protection detention requirements are part of the City of Azle criteria. A conceptual drainage study and Conceptual iSWM Site Plan for any proposed development shall include at a minimum the information listed in the Engineer's Checklist for Conceptual iSWM Site Plan shown in Chapter 5, Appendix A – City of Azle Detailed Checklists and Forms.

A Grading Permit is require prior to any construction or grading activity involving 0.1 acres or more of disturbed surface area, if disturbed areas are located within Floodplain and/or drainage easement. This Grading Permit will be approved for earthwork only, will be at the risk of the owner/developer, and will require compliance with any other required permits or approvals including floodplain and SWPPP, as applicable.

Preliminary iSWM Plans

The Preliminary iSWM Plan ensures that requirements and criteria are complied with and opportunities are taken to minimize adverse impacts from the development. This step builds on the data developed in the Conceptual iSWM Plan by refining and providing more detail to the concepts identified. If no Conceptual Plan is submitted, it shall be part of the Preliminary iSWM Plan. The checklist for Preliminary iSWM Plan in Chapter 5 outlines the data that shall be included in the preliminary iSWM Plan.

The Preliminary iSWM Plan shall consist of maps, plan sheets, narrative, and supporting design calculations (hydrologic and hydraulic) for the proposed stormwater management system. The completed Preliminary iSWM Plan shall be submitted to the local review authority for review and comment.

Local Provisions: A Preliminary Drainage study and iSWM Site Plan for any proposed development must accompany a preliminary plat submitted for development review, and shall include at a minimum the information listed in the Engineer's Checklist for Preliminary iSWM Site Plan shown in Chapter 5, Appendix A – City of Azle Detailed Checklists and Forms. The study will include a downstream assessment of properties that could be impacted by the development. These studies will include adequate hydrologic analysis to determine the existing, proposed, and fully-developed runoff for the drainage area that is affected by the proposed development and will include hydraulic studies that define the "adequate outfall". The study, as part of the development of the iSWM Site Plan, shall address existing downstream, off-site drainage conveyance system(s) and define the discharge path from the outlet of the on-site stormwater facilities, to the off-site drainage system(s) and/or appropriate receiving waters. It will include a capacity analysis of all existing constraint points such as pipes, culverts/bridges, or channels from the point of stormwater discharge of the development downstream to an "adequate outfall". For drainage areas of 100 acres or less, the downstream assessment will be limited to an "adequate outfall point", determined by the study, or the 10% rule (see the iSWM Hydrology Technical Manual, Section 2.4). For drainage areas larger than 100 acres, the "adequate outfall point" will be defined by the detailed hydrologic and hydraulic analyses. This preliminary drainage study and Preliminary iSWM Site Plan will include:

1. A topographical map of the entire watershed (not just the area of the proposed development) generally not smaller than 1"=200' (or other such scale approved by City of Azle), delineating the watershed boundary(s) and runoff design point(s), existing and proposed land use and zoning, and the size and description of the outfall drainage facilities and receiving streams.
2. Computation tables showing drainage areas, runoff coefficients, time of concentration, rainfall intensities and peak discharge for the required design storms, for both existing and proposed (ultimate development) conditions, at all design points for each component of the stormwater system (streets, pipes, channels, detention ponds, etc.).
3. Any proposed changes to watershed boundaries (i.e. by re-grading, where permissible by Texas Water Code). If significant changes to watershed boundary are made, more extensive analyses of downstream impact and mitigating detention will be required and a variance obtained from the Storm Water Manager.
4. FEMA Flood Hazard Areas, if applicable.
5. In addition any required Corps of Engineers' Section 404 permits, Conditional Letters of Map Revision (CLOMR), Letters of Map Revision (LOMR) or other permits relating to lakes and streams required by any federal, state or local authorities. These must be documented in the Drainage Study.
6. Detailed off-site outfall information. This shall include the presence of existing or proposed

drainage structures, bridges or culverts; documentation of existing versus proposed developed site as well as ultimate runoff, identification of downstream properties which might be impacted by increased runoff, and proposed detention or other means of mitigation. Downstream impacts shall generally be delineated identified to a point where the drainage from the proposed development has no impact on the receiving stream or on any downstream drainage systems within the "zone of influence".

7. Report with technical documentation.
8. A Grading Permit is required prior to any construction or grading activity involving 0.1 acres or more of disturbed surface area and if disturbed surface areas are located within floodplain or drainage easement. This Grading Permit will be approved for earthwork only will be at the risk of the owner/developer, and will require compliance with any other required permits or approvals including floodplain and Landscaping (Section 29) and SWPPP, as applicable.

Step 4 – Prepare Final iSWM Plans and iSWM Construction Plan

The Final iSWM Plans and iSWM Construction Plan shall be prepared together and submitted to the local review authority for approval prior to any soil disturbance or other construction activities on the development site. The Final iSWM Plans add further detail to the Preliminary iSWM Plan and reflect changes that are requested or required by the local review authority.

The Final iSWM Plans and iSWM Construction Plan, as outlined in the final iSWM Plan checklist in Chapter 5, shall include all of the revised elements of the Preliminary iSWM Plans as well as a landscape plan, operation and maintenance plan, and any permits/waiver requests.

Local Provisions: A Final Drainage Study and iSWM Site Plan for development of all or a portion (i.e. phase one or phase two, etc.) of the overall development shall be prepared and submitted to the City of Azle. This submittal shall include at a minimum the information listed in the Engineer's Checklist for Final iSWM Site Plan shown in Chapter 5, Appendix A – City of Azle Detailed Checklists and Forms, including:

1. Conformance with the Preliminary iSWM Site Plan and Study.
2. Submission of detailed drainage calculations and detailed design plans.
3. The submission of a cover sheet signed by the Storm Water Manager indicating the approval of the detailed construction drawings for the proposed development is sufficient to clear a plat drainage study comment.
4. Final drainage studies shall be approved based on the submission of a signed cover sheet and drainage map with calculations from the approved engineering construction drawings. Where City approval of construction plans is not required, the above information required for preliminary drainage studies, as well as construction plans for any drainage improvements, shall be submitted.
5. Note that unless specifically approved in a Grading Permit issued by the Storm Water Manager, no work may be performed in the FEMA regulatory floodway without a FEMA-approved Conditional Letter of Map Revision (CLOMR).
6. An iSWM Construction Plan must be prepared by an engineer; such plan shall provide for erosion and sediment control during construction, and must be submitted as an integral part of the final engineering documents.
7. A Storm Water Pollution Prevention Plan (SWPPP) must be prepared by the engineer or another qualified professional prior to construction in accordance with TCEQ and EPA requirements. The iSWM Construction Plan submitted with the final engineering documents should normally be incorporated into the SWPPP as its erosion and sediment control plan component.
8. A Grading Permit is required prior to any construction or grading activity involving 0.1 acres or more of disturbed surface area and if disturbed surface areas are located within floodplain and/or drainage easement. A Final Grading Permit will be required prior to the issuance of a building permit. See the Final Grading Permit (Form CITY OF AZLE-10) in Appendix A for submittal

information. This Final Grading Permit will be required, even if a Grading Permit was obtained at an earlier stage.

Construction Phase

1. Pre-construction Meeting - Where possible, a pre-construction meeting shall occur before any clearing or grading is initiated on the site. This step ensures that the owner-developer, contractor, engineer, and inspector can be sure that each party understands how the plan will be implemented on the site.
2. Periodic Inspections - Periodic inspections during construction by City of Azle representatives. Inspection frequency may vary with regard to site size and location; however, monthly inspections are a minimum target.
3. Final Inspection - A final inspection is needed to ensure that the construction conforms to the intent of the approved design. Prior to accepting the infrastructure components, issuing an occupancy permit, and releasing any applicable bonds, the City of Azle will ensure that: (a) temporary erosion control measures have been removed; (b) stormwater controls are unobstructed and in good working order; (c) permanent vegetative cover has been established in exposed areas; (d) any damage to natural feature protection and conservation areas has been mitigated; (e) conservation areas and buffers have been adequately marked or signed; and (f) any other applicable conditions have been met.
4. Record Drawings - Record drawings of the structural stormwater controls, drainage facilities, and other infrastructure components will be provided to the City of Azle by the developer.
5. Final Grading Certificate - (Form CITY OF AZLE-11) must be prepared by an engineer or the contractor which certifies that grading and stormwater infrastructure have been completed in substantial compliance with the Grading Permit, the iSWM Site Plan, and the SWPPP including re-vegetation and filing of Notice of Termination (NOT).

Step 5 – Complete Operations and Maintenance Plan

An Operations and Maintenance Plan shall be developed in accordance with this section. The plan shall be included in the Final iSWM Plan. It needs to clearly state which entity has responsibility for operation and maintenance of temporary and permanent stormwater controls and drainage facilities to ensure they function properly from the time they are first installed.

The Operations and Maintenance Plan shall include but is not limited to:

- Responsible party for all tasks in the plan
- Inspection and maintenance requirements
- Maintenance of permanent stormwater controls and drainage facilities during construction
- Cleaning and repair of permanent stormwater controls and drainage facilities before transfer of ownership
- Frequency of inspections for the life of the permanent structures
- Funding source for long-term maintenance
- Description of maintenance tasks and frequency of maintenance
- Access and safety issues
- Maintenance easements
- Reviewed and approved maintenance agreements
- Testing and disposal of sediments
- Life span of structures and replacement as needed

Guidance for development of Operations and Maintenance Plans has been provided with each temporary and permanent Best Management Practice (BMP) included in the iSWM Technical Manual.

Local Provisions:

A Stormwater Facility Maintenance Agreement must be prepared by the engineer for each stormwater control that will not be wholly maintained by the City of Azle. This agreement must outline both preventive maintenance tasks as well as major repairs, identify the schedule for each task, assign clear roles to effected parties, and provide a maintenance checklist to guide future owners including an annual self-inspection to be provided to the City of Azle.

For additional information, see Section 5.5, Stormwater Facility Maintenance Agreements.

14.3.0 *integrated* Design Criteria

This chapter gives details on criteria to meet the three focus areas of water quality, stream bank protection and flood mitigation, as well as information supportive of hydrology and stormwater conveyance.

14.3.1 Hydrologic Methods

14.3.1.1 Types of Hydrologic Methods

There are a number of empirical hydrologic methods available to estimate runoff characteristics for a site or drainage sub basin. However, the following methods have been selected to support hydrologic site analysis for the design methods and procedures included in this manual:

- Rational Method
- SCS Unit Hydrograph Method
- Snyder's Unit Hydrograph Method
- USGS & TXDOT Regression Equations
- iSWM Water Quality Protection Volume Calculation
- Water Balance Calculations

Table 14.3.1 lists the hydrologic methods and the circumstances for their use in various analysis and design applications. Table 3.2 provides some limitations on the use of several methods.

In general:

- The Rational Method is acceptable for small, highly impervious drainage areas, such as parking lots and roadways draining into inlets and gutters.
- The U.S. Geological Survey (USGS) and Texas Department of Transportation (TXDOT) regression equations are acceptable for drainage areas with characteristics within the ranges given for the equations shown in Table 3.2. These equations should not be used when there are significant storage areas within the drainage basin or where other drainage characteristics indicate general regression equations are not appropriate.

Local Provisions: NONE

Table 14.3.1 Applications of the Recommended Hydrologic Methods

Method	Rational Method	SCS Method	Modified Rational	Snyder's Unit Hydrograph	USGS / TXDOT Equations	iSWM Water Quality Volume Calculation
Water Quality Protection Volume (WQ_v)						✓
Streambank Protection Volume (SP_v)		✓		✓		
Flood Mitigation Discharge (Q_f)		✓		✓	✓	
Storage Facilities		✓	✓	✓		
Outlet Structures		✓		✓		
Gutter Flow and Inlets	✓					
Storm Drain Pipes	✓	✓		✓		
Culverts	✓	✓		✓	✓	
Bridges		✓		✓		
Small Ditches	✓	✓		✓		
Open Channels		✓		✓	✓	
Energy Dissipation		✓		✓		

Table 14.3.2 Constraints on Using Recommended Hydrologic Methods

Method	Size Limitations[1]	Comments
Rational	0 – 100 acres	Method can be used for estimating peak flows and the design of small site or subdivision storm sewer systems.
Modified Rational[2]	0 – 200 acres	Method can be used for estimating runoff volumes for storage design.
Unit Hydrograph (SCS)[3]	Any Size	Method can be used for estimating peak flows and hydrographs for all design applications.
Unit Hydrograph (Snyder's)[4]	1 acre and larger	Method can be used for estimating peak flows and hydrographs for all design applications.
TXDOT Regression Equations	10 to 100 mi^2	Method can be used for estimating peak flows for rural design applications.
USGS Regression Equations	3 – 40 mi^2	Method can be used for estimating peak flows for urban design applications.
iSWM Water Quality Protection Volume Calculation	Limits set for each Structural Control	Method can be used for calculating the Water Quality Protection Volume (WQ_v).

[1] Size limitation refers to the drainage basin for the stormwater management facility (e.g., culvert, inlet).

[2] Where the Modified Rational Method is used for conceptualizing, the engineer is cautioned that the method could underestimate the storage volume.

[3] This refers to SCS routing methodology included in many readily available programs (such as HEC-HMS or HEC-1) that utilize this methodology.

[4] This refers to the Snyder's methodology included in many readily available programs (such as HEC-HMS or HEC-1) that utilize this methodology.

Local Provisions:

Table 14.3.2A City of Azle Constraints on Using Recommended Hydrologic Methods

Method	Size Limitations[1]	Comments
Rational	0 – 200 acres	Method for estimating peak flows and the design of small site or subdivision storm sewer systems.
Modified Rational	0 – 25 acres	Method can be used for detention planning and conceptual design.
Unit Hydrograph (SCS)[3]	Any Size	Method can be used for estimating peak flows and hydrographs for all design applications.
Unit Hydrograph (Snyder's)[4]	100 acres and larger	Method can be used for estimating peak flows and hydrographs for all design applications.
TXDOT Regression Equations	10 to 100 mi^2	Method can be used for estimating peak flows for rural design applications.

USGS Regression Equations	3 – 40 mi^2	Method can be used for estimating peak flows for urban design applications.

- City of Azle requires that the "C" coefficients presented in Table 3.2A be used in the Modified Rational Method.
- Rainfall distribution for the SCS Unit Hydrograph shall be based on the Frequency Rainfall Data provided in Section 5.0 of the Hydrology Technical Manual centered at the midpoint of the rainstorm (12th hour of a 24-hour storm) unless otherwise approved by the Storm Water Manager.
- Figure 5.1 in Chapter 5 presents a sample computation sheet for the presentation of unit hydrograph method results. This form should be completed even if the computations are performed on an acceptable computer programs HEC-1 or HEC-HMS.
- An alternative method to determine Snyder's Lag is to determine the time of concentration (travel time) by the methodology described in Section 1.4 of the Hydrology Technical Manual and multiply this time of concentration by 0.6.
- The TxDOT and USGS Regression methods should only be used for comparison of the reasonableness of other approved determinations, not for final results or design unless specifically approved by Storm Water Manager.
- iSWM Water Quality Protection Volume (WQv) calculation method is not currently required by City of Azle.
- Fully Developed Conditions – For watershed hydrology, fully developed conditions include:
  - All existing developed areas shall reflect current land use or current zoning, whichever yields the greatest runoff.
  - All existing undeveloped areas shall reflect anticipated future land use designated by zoning classification, by the City's Comprehensive Plan, or by an approved concept plan.
- If the anticipated future development is unknown, a minimum weighted runoff coefficient of 0.75 shall be used.
- Table 3.2B presents the Rational Formula Runoff "C" Coefficients for the City of Azle. The basis of these coefficients is the standard zoning classification used by the City ("A-43, "A-21", etc.) An example of the determination of these coefficients is presented in Figure 3.1A.

Table 14.3.2B Runoff Coefficients

Description of Land Use	% Impervious	Runoff Coefficient "C"
Residential one-acre lots (1) (2)	35	0.51
Residential " half-acre lots	37	0.52
Residential 10,000 SF lots	49	0.59
Residential " 7,500 SF Lots	55	0.59
Residential " 5,000 SF Lots	61	0.63
Residential " ≤ 5,000 SF Lots	65	0.67
Multi-family		
	>64	0.69
	≥ 79	0.77
	≥93	0.86

Commercial/Industrial/House of Worship/School		
20% Open Space (Site Plan required)	80	0.78
Parks, Cemeteries	7	0.34
Railroad Yard Areas	29	0.47
Streets: Asphalt, Concrete and Brick	100	0.90
Drives, Walks, and Roofs	100	0.90
Gravel Areas	43	0.56
Unimproved Areas	0	0.30

Assumptions:

(1) For Residential Calculations:

- Current CITY OF AZLE development standards for minimum lot size and maximum lot coverage (structure) for each classification
- Assumed 10.5' Parkway and 18' driveway
- Assumed 29' B-B street dimension
- Calculated by applying 90% runoff from impervious areas and 30% runoff from pervious areas

(2) Calculated from designated set-backs

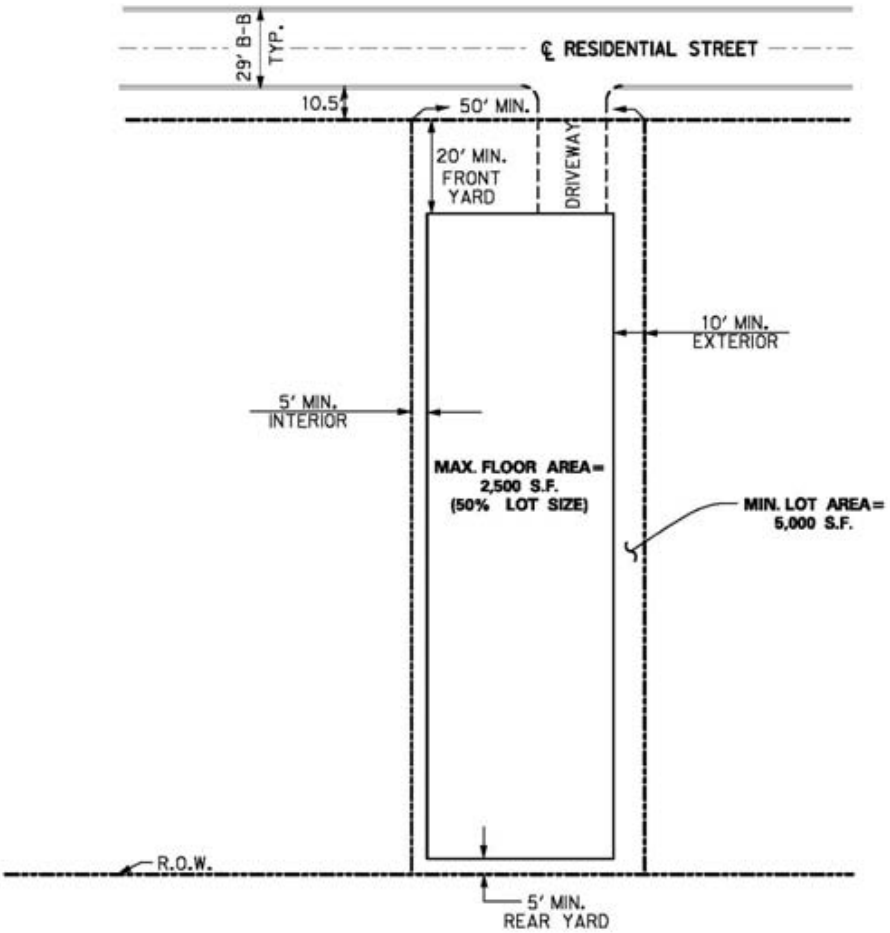

APPROX. USE OF LOT

AREA = 5,000 S.F. + R.O.W. (25'x50')

= 6,250 S.F. MAX.

C	USE	A	MAX. CA
0.9	STREET (14.5x150)	725	652.5
0.9	DRIVEWAY AND SIDEWALK	677	609.3
0.9	ROOF	2,500	2,250.0
0.3	LANDSCAPE AREA	2,348	704.4
	TOTAL CA		4,216.2
	CALC. C=CA/A		0.67

APPROXIMATION OF RUNOFF COEFFICIENT

C=0.67

Figure 14.3.1A - Sample Calculation Sheet for Runoff Coefficient "C"

14.3.1.2 Rainfall Estimation

Rainfall intensities are provided in *Section 5.0 of the Hydrology Technical Manual* for the nine (9) counties within the North Central Texas Council of Governments. The intensities are based on a combination of data from Hydro-35 and USGS. These intensities shall be used for all hydrologic analysis within the applicable county.

Local Provisions: NONE

14.3.2 Water Quality Protection

14.3.2.1 Introduction

iSWM requires the use of *integrated* Site Design Practices as the primary means to protect the water quality of our streams, lakes, and rivers from the negative impacts of stormwater runoff from development. The *integrated* Site Design Practices shall be designed as part of the iSWM Plans. In addition to the *integrated* Site Design Practices, required water quality protection can be achieved by two additional options: (1) by treating the water quality protection volume and (2) assisting with off-site pollution prevention activities. These three approaches are described below.

Local Provisions: The City of Azle has currently opted to implement the streambank protection and flood control goals,and water quality protection components.. The City of Azle encourages land developers to consider the use of stormwater controls within new developments that benefit not only flood control and streambank protection, but also water quality protection.

14.3.2.2 Option 1: integrated Site Design Practices and Credits

The *integrated* Site Design Practices are methods of development that reduce the "environmental footprint" of a site. They feature conservation of natural features, reduced imperviousness, and the use of the natural drainage system. In this option, points are awarded for the use of different Site Design Practices. A minimum number of points are needed to meet the iSWM requirements for Water Quality. Additional points can be gained to qualify for development incentives.

List of *integrated* Site Design Practices and Techniques

Twenty *integrated* Site Design Practices are grouped into four categories listed below. Not all practices are applicable to every site.

- **Conservation of Natural Features and Resources**
  1. Preserve Undisturbed Natural Areas
  2. Preserve Riparian Buffers
  3. Avoid Floodplains
  4. Avoid Steep Slopes
  5. Minimize Silting on Porous or Erodible Soils
- **Lower Impact Site Design Techniques**
  6. Fit Design to the Terrain
  7. Locate Development in Less Sensitive Areas
  8. Reduce Limits of Clearing and Grading
  9. Utilize Open Space Development
  10. Consider Creative Designs
- **Reduction of Impervious Cover**
  11. Reduce Roadway Lengths and Widths
  12. Reduce Building Footprints

13. Reduce the Parking Footprint
14. Reduce Setbacks and Frontages
15. Use Fewer or Alternative Cul-de-Sacs
16. Create Parking Lot Stormwater "Islands"

- **Utilization of Natural Features for Stormwater Management**

17. Use Buffers and Undisturbed Areas
18. Use Natural Drainage ways Instead of Storm Sewers
19. Use Vegetated Swale Instead of Curb and Gutter
20. Drain Rooftop Runoff to Pervious Areas

More detail on each site design practice is provided in the *integrated* Site Design Practice Summary Sheets in *Section 2.2 of the Planning Technical Manual*.

Local Provisions: NONE

Integration of Site Design Practices into Site Development Process

During the site planning process described in Chapter 2, there are several steps involved in site layout and design, each more clearly defining the location and function of the various components of the stormwater management system. To be most effective and easier to incorporate, *integrated* Site Design Practices should be part of this overall development process as outlined in Table 3.3.

Table 14.3.3 Integration of Site Design Practices with Site Development Process

Site Development Phase	Site Design Practice Activity
Site Analysis	• Identify and delineate natural feature conservation areas (natural areas and stream buffers) • Perform site reconnaissance to identify potential areas for and types of credits • Determine stormwater management requirements
Conceptual Plan	• Preserve natural areas and stream buffers during site layout • Reduce impervious surface area through various techniques • Identify locations for use of vegetated channels and groundwater recharge • Look for areas to disconnect impervious surfaces • Document the use of site design practices
Preliminary and Final Plan	• Perform layout and design of credit areas – integrating them into treatment trains • Ensure integrated Focus Areas are satisfied • Ensure appropriate documentation of site design credits according to local requirements
Construction	• Ensure protection of key areas • Ensure correct final construction of areas needed for credits • Inspect and maintain implementation of BMPs during construction

Table 14.3.3 Integration of Site Design Practices with Site Development Process	
Site Development Phase	**Site Design Practice Activity**
Final Inspection	• Develop maintenance requirements and documents • Ensure long term protection and maintenance • Ensure credit areas are identified on final plan and plat if applicable

Point System

All sites that meet iSWM applicability must provide on-site enhanced water quality protection. Under the integrated Site Design Practice option, sites that accumulate a minimum number of points by incorporating integrated Site Design Practices are considered to have provided enhanced water quality protection.

The point system is made up of three components:

1. The initial percentage of the site that has been previously disturbed sets the minimum requirement. This is shown in the left-hand column of Table 3.4.
2. A minimum required total of Water Quality Protection (WQP) points is needed to meet the basic water quality criteria. This minimum is shown in the center column of Table 3.4.
3. Optional additional points can be accumulated through additional use of Site Design Practices to be eligible for developer incentives. Each developer incentive attained requires ten (10) additional Site Design Practice points above the minimum required points as shown in the right-hand column of Table 14.3.4.

As shown in Table 14.3.4, the initial percentage of site disturbance sets the minimum required points necessary to meet Water Quality Protection criteria. If a developer wishes to go beyond this minimum then the number of additional points required to attain specific development incentives is also given.

Table 14.3.4 *integrated* Site Design Point Requirements		
Percentage of Site(by Area) with Natural Features Prior to Proposed Development	**Minimum Required Points for Water Quality Protection (WQP)**	**Additional Points Above WQP for Development Incentives**
> 50%	50	10 points each
20 - 50%	30	10 points each
< 20%	20	10 points each

The minimum number of points required to achieve WQP, as shown in the center column of Table 3.4, depends on the proportion of undisturbed natural features that exist on the site before it is developed. It is assumed that disturbing a site that has little previously disturbed area will cause more relative environmental impact than a site that has already incurred significant site disturbance. Therefore, disturbing a “pristine” site carries a higher restoration/preservation requirement.

For the purpose of this evaluation, undisturbed natural features are areas with one or more of the following characteristics:

- Unfilled floodplain
- Stand of trees, forests
- Established vegetation
- Steep sloped terrain
- Creeks, gullies, and other natural stormwater features
- Wetland areas and ponds

The number of points credited for the use of integrated Site Design Practices is shown in Table 3.5. To determine the qualifying points for a site, the developer must reference Table 3.5 and follow the guidance for each practice in the *Planning Technical Manual*.

Using the area of the site that is eligible for a practice as a basis, points are given for the percent of that area to which the integrated Site Design Practice is applied. For example, if a planned site has four (4) acres of riparian buffer and the developer proposes to preserve two (2) acres, then the site would qualify for 50 percent of the 8 credit points for iSWM Site Design Practice 2 (Preserve Riparian Buffers), because 50 percent of the site design practice was incorporated. The actual points earned for iSWM Site Design Practice 2 would be 4 points (0.50 * 8 pts = 4 pts). To comply with water quality protection and to apply for site design credits, the developer must submit the completed table and associated documentation or calculations to the review authority.

Table 14.3.5 Point System for integrated Site Design Practices

iSWM Practice No.	Practice	Percent of Eligible Area Using Practice	Maximum Points	Actual Points Earned (% practice used * max. points)
Conservation of Natural Features and Resources				
1	Preserve/Create Undisturbed Natural Areas		8	
2	Preserve or Create Riparian Buffers Where Applicable		8	
3	Avoid Existing Floodplains or Provide Dedicated Natural Drainage Easements		8	
4	Avoid Steep Slopes		3	
5	Minimize Site on Porous or Erodible Soils		3	
Lower Impact Site Design				
6	Fit Design to the Terrain		4	
7	Locate Development in Less Sensitive Areas		4	
8	Reduce Limits of Clearing and Grading		6	
9	Utilize Open Space Development		8	
10	Incorporate Creative Design (e.g. Smart Growth, LEED Design, Form Based Zoning)		8	
Reduction of Impervious Cover				
11	Reduce Roadway Lengths and Widths		4	

Table 14.3.5 Point System for integrated Site Design Practices				
iSWM Practice No.	**Practice**	**Percent of Eligible Area Using Practice**	**Maximum Points**	**Actual Points Earned (% practice used * max. points)**
12	Reduce Building Footprints		4	
13	Reduce the Parking Footprint		5	
14	Reduce Setbacks and Frontages		4	
15	Use Fewer or Alternative Cul-de-Sacs		3	
16	Create Parking Lot Stormwater "Islands"		5	
Utilization of Natural Features				
17	Use Buffers and Undisturbed Areas		4	
18	Use Natural Drainage ways Instead of Storm Sewers		4	
19	Use Vegetated Swale Design		3	
20	Drain Runoff to Pervious Areas		4	
Subtotal – Actual site points earned			**100**	
Subtract minimum points required (Table 3.4) -				
Points available for development incentives				
Add 1 point for each 1% reduction of impervious surface +				
Total Points for Development Incentives				

Local Provisions: The Water Quality Protection Volume requirement is not required at this time in Azle, except as may be required by Tarrant Regional Water District for new facilities connecting directly to Eagle Mountain Lake.

Development Incentives

The developer can use *integrated* Site Design Practice points in excess of the minimum required for water quality protection to qualify for development incentives provided by the municipality. Additional points can be earned for redevelopment sites. Each reduction of one (1) percent imperviousness from existing conditions qualifies for one (1) site design point. The total points available for development incentives shall be calculated per Table 3.5. Each incentive requires ten (10) additional points above the minimum point required to meet water quality criteria, as stated in Table 3.4.

A list of available development incentives includes:

1. Narrower pavement width for minor arterials
2. Use of vegetated swales in lieu of curb and gutter for eligible developments
3. Reduced ROW requirements, i.e. Sidewalk/Utility Easements
4. Increased density in buildable area, floor area ratios, or additional units in buildable area
5. Expedited plans review and inspection
6. Waiver or reduction of fees
7. Local government public-private partnerships

8. Waiver of maintenance, public maintenance
9. Stormwater user fee credits or discounts
10. Rebates, local grants, reverse auctions
11. Low interest loans, subsidies, tax credits, or financing of special green projects
12. Awards and recognition programs
13. Reductions in other requirements

Local Provisions: The Development Incentives and Integrated Design point system described above are not adopted by the City of Azle. The development policies, however, encourage the incorporation of stormwater controls for achieving stormwater quality goals through the acceptance of perpetual, limited maintenance of preserved streams and by affording flexibility in placing stormwater quality treatment controls in land required for other purposes such as parks of commercial landscape areas.

14.3.2.3 Option 2: Treat the Water Quality Protection Volume

Treat the Water Quality Protection Volume by reducing total suspended solids from the development site for runoff resulting from rainfall of 1.5 inches (85th percentile storm). Stormwater runoff equal to the Water Quality Protection Volume generated from sites must be treated using a variety of on-site structural and nonstructural techniques with the goal of removing a target percentage of the average annual total suspended solids.

A system has been developed by which the Water Quality Protection Volume can be reduced, thus requiring less structural control. This is accomplished through the use of certain reduction methods, where affected areas are deducted from the site area, thereby reducing the amount of runoff to be treated. For more information on the Water Quality Volume Reduction Methods see *Section 1.3 of the Water Quality Technical Manual*.

Water Quality Protection Volume

The Water Quality Protection Volume (WQ_v) is the runoff from the first 1.5 inches of rainfall. Thus, a stormwater management system designed for the WQ_v will treat the runoff from all storm events of 1.5 inches or less, as well as a portion of the runoff for all larger storm events. For methods to determine the WQ_v, see *Section 1.2 of the Water Quality Technical Manual*.

Local Provisions: For reference only.

Recommended Stormwater Control Practices

Below is a list of recommended structural stormwater control practices. These structural controls are recommended for use in a wide variety of applications and have differing abilities to remove various kinds of pollutants. It may take more than one control to achieve a certain pollution reduction level. A detailed discussion of each of the controls, as well as design criteria and procedures, can be found in the Site Development Controls Technical Manual. Refer to Table 3.6 for details regarding primary and secondary controls.

- Bioretention
- Enhanced swales (dry, wet, wetland)
- Ponds
- Porous surfaces

- Alum treatment
- Detention
- Filter strips
- Sand filters, filter boxes, etc
- Infiltration wells and trenches
- Proprietary systems
- Green roofs
- Rainwater harvesting
- Wetlands
- Submerged gravel wetlands

Local Provisions: For design guidance and technical reference.

Using Other or New Structural Stormwater Controls

Innovative technologies will be allowed and encouraged. Any such system will be required to provide sufficient documentation as to its effectiveness and reliability. Communities can allow controls not included in this manual at their discretion. However, these communities shall require third party proof of performance, maintenance, application requirements, and limitations.

More specifically, new structural stormwater control designs will not be accepted for inclusion in the manual until independent performance data shows that the structural control conforms to local and/or State criteria for treatment, conveyance, maintenance, and environmental impact.

Suitability of Stormwater Controls to Meet Stormwater Management Goals

The stormwater control practices recommended in this manual vary in their applicability and ability to meet stormwater management goals:

Primary Controls

Primary Structural Stormwater Controls have the ability to fully address one or more of the Steps in the *integrated* Focus Areas if designed appropriately. Structural controls are recommended for use with a wide variety of land uses and development types. These structural controls have a demonstrated ability to effectively treat the Water Quality Volume (WQv) and have been shown to be able to remove 70% to 80% of the annual average total suspended solids (TSS) load in typical post-development urban runoff when designed, constructed, and maintained in accordance with recommended specifications. Several of these structural controls can also be designed to provide primary control for downstream stream bank protection (SPv) and flood mitigation. These structural controls are recommended stormwater management facilities for a site wherever feasible and practical.

Secondary Controls

A number of structural controls are recommended only for limited use or for special site or design conditions. Generally, these practices either: (1) do not have the ability on their own to fully address one or more of the Steps in the *integrated* Focus Areas, (2) are intended to address hotspot or specific land use constraints or conditions, and/or (3) may have high or special maintenance requirements that may preclude their use. These types of structural controls are typically used for water quality treatment only. Some of these controls can be used as pretreatment measures or in series with other structural controls to meet pollutant removal goals. Such structural controls are not recommended for residential developments.

Table 3.6 summarizes the stormwater management suitability of the various stormwater controls in addressing the *integrated* Focus Areas. The *Site Development Controls Technical Manual* provides guidance on the use of stormwater controls as well as how to calculate the pollutant removal efficiency for stormwater controls in series. The *Site Development Controls Technical Manual* also provides guidance for choosing the appropriate stormwater control(s) for a site as well as the basic considerations and limitations on the use of a particular stormwater control.

Table 14.3.6 Suitability of Stormwater Controls to Meet integrated Focus Areas

Category	*integrated* Stormwater Controls	TSS/ Sediment Removal Rate	Water Quality Protection	Streambank Protection	On-Site Flood Control	Downstream Flood Control
Bioretention Areas	Bioretention Areas	80%	P	S	S	-
Channels	Enhanced Swales	80%	P	S	S	S
	Channels, Grass	50%	S	S	P	S
	Channels, Open	-	-	-	P	S
Chemical Treatment	Alum Treatment System	90%	P	-	-	-
Conveyance System Components	Culverts	-	-	-	P	P
	Energy Dissipation	-	-	P	S	S
	Inlets/Street Gutters	-	-	-	P	-
	Pipe Systems	-	-	P	P	P
Detention	Detention, Dry	65%	S	P	P	P
	Detention, Extended Dry	65%	S	P	P	P
	Detention, Multi-purpose Areas	-	-	P	P	P
	Detention, Underground	-	-	P	P	P
Filtration	Filter Strips	50%	S	-	-	-
	Organic Filters	80%	P	-	-	-
	Planter Boxes	80%	P	-	-	-
	Sand Filters, Surface/Perimeter	80%	P	S	-	-
	Sand Filters, Underground	80%	P	-	-	-
Hydrodynamic Devices	Gravity (Oil-Grit) Separator	40%	S	-	-	-
Infiltration	Downspout Drywell	80%	P	-	-	-
	Infiltration Trenches	80%	P	S	-	-
	Soakage Trenches	80%	P	S	-	-
Ponds	Wet Pond	80%	P	P	P	P
	Wet ED Pond	80%	P	P	P	P
	Micropool ED Pond	80%	P	P	P	P
	Multiple Ponds	80%	P	P	P	P
Porous Surfaces	Green Roof	85%	P	S	-	-
	Modular Porous Paver Systems	[2]	S	S	-	-
	Porous Concrete	[2]	S	S	-	-
Proprietary Systems	Proprietary Systems [1]	[1]	S/P	S	S	S
Re-Use	Rain Barrels	-	P	-	-	-
Wetlands	Wetlands, Stormwater	80%	P	P	P	P
	Wetlands, Submerged Gravel	80%	P	P	S	-

P = Primary Control: Able to meet design criterion if properly designed, constructed and maintained.
S = Secondary Control: May partially meet design criteria. Designated as a Secondary control due to considerations such as maintenance concerns. For Water Quality Protection, recommended for limited use in approved community-designated areas.
- =Not typically used or able to meet design criterion.

[1] = The application and performance of proprietary commercial devices and systems must be provided by the manufacturer and should be verified by independent third-party sources and data, if used as a primary control. Third-party sources could include Technology Acceptance Reciprocity Partnership, Technology Assessment Protocol – Ecology, or others.
[2] = Porous surfaces provide water quality benefits by reducing the effective impervious area.

14.3.2.4 Option 3: Assist with Off-Site Pollution Prevention Programs and Activities

Some communities have implemented pollution prevention programs/activities in certain areas to remove pollutants from the runoff after it has been discharged from the site. This may be especially true in intensely urbanized areas facing site redevelopment where many of the BMP criteria would be difficult to apply. These programs will be identified in the local jurisdiction's approved TPDES stormwater permit and/or in a municipality's approved watershed plan. In lieu of on-site treatment, the developer can request to simply assist with the implementation of these off-site pollution prevention programs/activities.

Developers should contact the municipality to determine if there are any plans to address runoff pollutants within the region of proposed development. If no plans exist, consider proposing regional alternatives that would address pollution prevention.

Local Provisions: Off-site pollution prevention activities are not currently required by the City of Azle.

14.3.3 Acceptable Downstream Conditions

As part of the iSWM Plan development, the downstream impacts of development must be carefully evaluated for the two focus areas of Stream bank Protection and Flood Mitigation. The purpose of the downstream assessment is to protect downstream properties from increased flooding and downstream channels from increased erosion potential due to upstream development. The importance of the downstream assessment is particularly evident for larger sites or developments that have the potential to dramatically impact downstream areas. The cumulative effect of smaller sites, however, can be just as dramatic and, as such, following the *integrated* Focus Areas is just as important for the smaller sites as it is for the larger sites.

The assessment shall extend from the outfall of a proposed development to a point downstream where the discharge from a proposed development no longer has a significant impact, in terms of flooding increase or velocity above allowable, on the receiving stream or storm drainage system. The local jurisdiction shall be consulted to obtain records and maps related to the National Flood Insurance Program and the availability of Flood Insurance Studies and Flood Insurance Rate Maps (FIRMs) which will be helpful in this assessment. The assessment shall be a part of the preliminary and final iSWM plans, and must include the following properties:

- Hydrologic analysis of the pre- and post-development on-site conditions
- Drainage path that defines extent of the analysis
- Capacity analysis of all existing constraint points along the drainage path, such as existing floodplain developments, underground storm drainage systems culverts, bridges, tributary confluences, or channels
- Offsite undeveloped areas are considered as "full build-out" for both the pre- and post-development analyses
- Evaluation of peak discharges and velocities for three 24-hour storm events
  - Stream bank protection storm
  - Conveyance storm
  - Flood mitigation storm
- Separate analysis for each major outfall from the proposed development

Once the analysis is complete, the designer must answer the following questions at each determined junction downstream:

- Are the post-development discharges greater than the pre-development discharges?
- Are the post-development velocities greater than the pre-development velocities?
- Are the post-development velocities greater than the velocities allowed for the receiving system?
- Are the post-development flood heights more than 0.1 feet above the pre-development flood heights?

These questions shall be answered for each of the three storm events. The answers to these questions will determine the necessity, type, and size of non-structural and structural controls to be placed on-site or downstream of the proposed development.

Section 2.0 of the Hydrology Technical Manual gives additional guidance on calculating the discharges and velocities, as well as determining the downstream extent of the assessment.

Local Provisions:

Downstream Assessment

Downstream impacts due to a development must be analyzed and mitigated for the 1-, 10-, and 100-year floods for the entire Zone of Influence, as determined by the development engineer's analysis. The Zone of Influence for any proposed development must be defined by the development engineer, based on a drainage study that determines the specific location along the drainage route where "no adverse impacts" from the new development exist. Storm drainage from a development must be carried to an "adequate outfall" or "acceptable outfall."

Zone of Influence

A "zone of influence" from a proposed development extends to a point downstream where the discharge from a proposed development no longer has a significant impact upon the receiving stream or storm drainage system. The Zone of Influence for any proposed development must be defined by the development engineer by a drainage study that: (1) determines the extent of the downstream drainage route subject to impacts from a proposed development, and (2) delineates what existing conditions are in place or what proposed mitigation is planned so that "no adverse impacts" from the new development will occur.

A drainage study will include the necessary hydrologic and hydraulic analyses to clearly demonstrate that the limits of the Zone of Influence have been identified, and that along the drainage route to that location, these parameters are met:

- No new or increased flooding of existing insurable (FEMA) structures (habitable buildings),
- No significant (0.1') increases in flood elevations over existing roadways for the 1-, 10- and 100-year floods.
- No significant rise (0.1' or less) in 100-year flood elevations, unless contained in existing channel, roadway, drainage easement and/or R.O.W.
- Where provisions of the City's floodplain ordinance may be more restrictive, the floodplain ordinance shall have authority over the above provisions.
- No significant increases (maximum of 5%) in channel velocities for the 1-, 10- and 100-year floods. Post-development channel velocities cannot be increased by more than 5% above pre-development velocities, nor exceed the applicable maximum permissible velocity shown in Table 3.3 in the Hydraulics Technical Manual. Exceptions to these criteria will require certified geotechnical/geomorphologic studies that provide documentation that the higher velocities will not create additional erosion. If existing channel velocities exceed six (6) feet per second, no additional increase in velocities will be allowed.
- No increases in downstream discharges caused by the proposed development that, in combination with existing discharges, exceeds the existing capacity of the downstream storm drainage system.
- For watersheds of 100 acres or less at any proposed outfall, the downstream assessment may use the ten percent rule of thumb (as delineated in Section 2.0 of the Hydrology Technical Manual) or a detailed study in order to determine the Zone of Influence.
- For all other watersheds, the Zone of Influence will be defined by a detailed hydrologic and hydraulic analysis.

Adequate Outfall

Storm drainage from a development must be carried to an "adequate outfall" or "acceptable outfall." **An adequate outfall is one that does not create adverse flooding or erosion conditions downstream and is in all cases subject to the Storm Water Manager approval.**

Drainage Studies

Studies of the proposed development and drainage areas, including a downstream assessment of properties that could be impacted by the development, will accompany the conceptual, preliminary, and final site plans. The "zone of influence" and "adequate outfall point" for the proposed development will be identified in the study and iSWM Site Plan. An adequate outfall is one that does not create adverse flooding or erosion conditions downstream and is in all cases subject to the approval of the Storm Water Manager.

These studies will include adequate hydrologic analysis to determine the existing, proposed, and fully-developed runoff for the drainage area that is affected by the proposed development. They will also include hydraulic studies that help define the "Zone of Influence" and any upstream or downstream offsite effects. The study, as part of the development site plan, shall address existing downstream, off-site drainage conveyance system(s) and define the drainage path from the outfall of the on-site stormwater facilities, to the off-site drainage system(s) and/or appropriate receiving waters.

14.3.4 Streambank Protection

The second focus area is in streambank protection. There are three options by which a developer can provide adequate streambank protection downstream of a proposed development. The first step is to perform the required downstream assessment as described in Section 14.3.3. If it is determined that the proposed project does not exceed acceptable downstream velocities or the downstream conditions are improved to adequately handle the increased velocity, then no additional streambank protection is required. If on-site or downstream improvements are required for streambank protection, easements or right-of-entry agreements will need to be obtained in accordance with Section 14.3.7. If the downstream assessment shows that the velocities are within acceptable limits, then no streambank protection is required. Acceptable limits for velocity control are contained in Tables 14.3.10 and 14.3.11.

Option 1: Reinforce/Stabilize Downstream Conditions

If the increased velocities are greater than the allowable velocity of the downstream receiving system, then the developer must reinforce/stabilize the downstream conveyance system. The proposed modifications must be designed so that the downstream system is protected from the post-development velocities. The developer must provide supporting calculations and/or documentation that the downstream velocities do not exceed the allowable range once the downstream modifications are installed.

Allowable bank protection methods include stone riprap, gabions, and bio-engineered methods. *Sections 3.2 and 4.0 of the Hydraulics Technical Manual* give design guidance for designing stone riprap for open channels, culvert outfall protection, riprap aprons for erosion protection at outfalls, and riprap basins for energy dissipation.

Local Provisions: NONE

Option 2: Install Stormwater Controls to Maintain Existing Downstream Conditions

The developer must use on-site controls to keep downstream post-development discharges at or below allowable velocity limits. The developer must provide supporting calculations and/or documentation that the on-site controls will be designed such that downstream velocities for the three storm events (Streambank Protection, Conveyance, and Flood Mitigation) are within an allowable range once the

controls are installed.

Local Provisions: NONE

Option 3: Control the Release of the 1-yr, 24-hour Storm Event

Twenty-four hours of extended detention shall be provided for on-site, post-developed runoff generated by the 1-year, 24-hour rainfall event to protect downstream channels. The required volume for extended detention is referred to as the Streambank Protection Volume (denoted SP_v). The reduction in the frequency and duration of bankfull flows through the controlled release provided by extended detention of the SP_v will reduce the bank scour rate and severity.

To determine the SP_v refer to *Section 3.0 of the Hydrology Technical Manual*.

Local Provisions: This option protects a stream from increased runoff discharge rates and velocities that tend to occur with development.

14.3.5 Flood Mitigation

14.3.5.1 Introduction

Flood analysis is based on the design storm events as defined in Section 14.1.3: for conveyance storm and the flood mitigation storm.

The intent of the flood mitigation criteria is to provide for public safety; minimize on-site and downstream flood impacts from the three storm events; maintain the boundaries of the mapped 100-year floodplain; and protect the physical integrity of the on-site stormwater controls and the downstream stormwater and flood mitigation facilities.

Flood mitigation must be provided for on-site conveyance system, as well as downstream outfalls as described in the following sections.

14.3.5.2 Flood Mitigation Design Options

There are three options by which a developer may address downstream flood mitigation. These options closely follow the three options for Streambank Protection. When on-site or downstream modifications are required for downstream flood mitigation, easements or right-of-entry agreements will need to be obtained in accordance with Section 3.7.

The developer will provide all supporting calculations and/or documentation to show that the existing downstream conveyance system has capacity (Q_f) to safely pass the full build-out flood mitigation storm discharge.

Option 1: Provide Adequate Downstream Conveyance Systems

When the downstream receiving system does not have adequate capacity, then the developer shall provide modifications to the off-site, downstream conveyance system. If this option is chosen the proposed modifications must be designed to adequately convey the full build-out stormwater peak discharges for the three storm events. The modifications must also extend to the point at which the discharge from the proposed development no longer has a significant impact on the receiving stream or storm drainage system. The developer must provide supporting calculations and/or documentation that the downstream peak discharges and water surface elevations are safely conveyed by the proposed system, without endangering downstream properties, structures, bridges, roadways, or other facilities.

Option 2: Install Stormwater Controls to Maintain Existing Downstream Conditions

When the downstream receiving system does not have adequate capacity, then the developer shall provide stormwater controls to reduce downstream flood impacts. These controls include on-site controls such as detention, regional controls, and, as a last resort, local flood protection such as levees, floodwalls, floodproofing, etc.

The developer must provide supporting calculations and/or documentation that the controls will be designed and constructed so that there is no increase in downstream peak discharges or water surface elevations due to development.

Option 3: In lieu of a Downstream Assessment, Maintain Existing On-Site Runoff Conditions

Lastly with Option 3, on-site controls shall be used to maintain the pre-development peak discharges from the site. The developer must provide supporting calculations and/or documentation that the on-site controls will be designed and constructed to maintain on-site existing conditions.

It is important to note that Option 3 does not require a downstream assessment. It is a detention-based approach to addressing downstream flood mitigation after the application of the *integrated* site design practices.

For many developments however, the results of a downstream assessment may show that significantly less flood mitigation is required than “detaining to pre-development conditions”. This method may also exacerbate downstream flooding problems due to timing of flows. The developer shall confirm that detention does not exacerbate peak flows in downstream reaches.

Local Provisions: NONE

14.3.6 Stormwater Conveyance Systems

14.3.6.1 Introduction

Stormwater system design is an integral component of both site and overall stormwater management design. Good drainage design must strive to maintain compatibility and minimize interference with existing drainage patterns; control flooding of property, structures, and roadways for design flood events; and minimize potential environmental impacts on stormwater runoff.

Stormwater collection systems must be designed to provide adequate surface drainage while at the same time meeting other stormwater management goals such as water quality, streambank protection, habitat protection, and flood mitigation.

Design

Fully developed watershed conditions shall be used for determining runoff for the conveyance storm and the flood mitigation storm.

Local Provisions: NONE

14.3.6.2 Hydraulic Design Criteria for Streets and Closed Conduits

Introduction

This section is intended to provide criteria and guidance for the design of on-site flood mitigation system

components including:

- Street and roadway gutters
- Stormwater inlets
- Parking lot sheet flow
- Storm drain pipe systems

Streets and Stormwater Inlets

Design Frequency

- Streets and roadway gutters: conveyance storm event
- Inlets on-grade: conveyance storm event
- Parking lots: conveyance storm event
- Storm drain pipe systems: conveyance storm event
- Low points: flood mitigation storm event
- Street ROW: flood mitigation storm event
- Drainage and Floodplain easements: flood mitigation storm event

Local Provisions: The iSWM Inlet Design Methodology (iSWM Hydraulics Technical Manual) is adopted. Under the City of Azle classification system, inlets have been classified into two major groups namely: Inlets in Sumps and Inlets on Grade with Gutter Depression. The only curb inlets that are allowed by the City of Azle are those in sumps and depressed inlets on grade. Grate inlets and combination inlets are not allowed.

Figures presented in Chapter 5 can be used to document all closed conduit calculations even if calculations are performed on an acceptable computer program unless otherwise approved by Storm Water Manager.

A "rooftop" section should be used for concrete streets and a parabolic section for asphalt streets. Please note that the nomograph in Figure 1.2 of the iSWM Hydraulics Technical Manual does not completely address cases where the crown elevation is lower that the top of curb elevation. For those cases a combination of Figure 1.2 and 1.3 can be used or a standard hydraulics program such as EPA-SWMM, HEC-RAS or FlowMaster can be applied.

The design storms presented in the regional portion of Section 1.3 of this document are replaced by the design storms required by the City of Azle as follows:

Storm Sewer System

The design storm is a minimum of the 100-year storm for the combination of the closed conduit and surface drainage system.

Runoff from the 5-year storm must be contained within the permissible spread of water in the gutter. The 100-year storm flow must be contained within the ROW. Adequate inlet capacity shall be provided to intercept surface flows before the street ROW capacity is exceeded. **Note: The capacity of the underground system may be required to exceed the 5-year storm in order to satisfy the 100-year storm criteria.**

The closed conduit HGL must be equal to or below the gutter line for pipe systems and one (1) foot or more below the curb line at inlets. For situations where no ROW exists, the 100-year HGL must be below finished ground. The 100-year HGL will be tracked carefully throughout the system and

described in the hydraulic calculations tables in Chapter 5 and in the construction drawings.

Inlets in Sumps
Curb opening inlets in sumps (Type CO-S) are addressed in Section 1.2.7 of the Hydraulics Technical Manual. Drop inlets in sumps (Y Inlet) are addressed in Section 1.2.9 of the Hydraulics Technical Manual.

In sag or sump conditions, the storm drain and sump inlets should be sized to intercept and convey a minimum of the 25-year storm and a positive structural overflow is required to provide for the remainder of the 100-year storm. The positive overflow structure must be concrete or other acceptable non-earthen structure with a minimum bottom width of 4 feet extending from the sump inlet to the storm sewer outfall. It must be designed to pass at least 20 cfs with 1' of freeboard from the top of curb to the adjacent finish floor elevations (minimum finish floor elevations for all lots adjacent to said overflows must be shown on the plat).

All flumes that pass through sidewalks shall have a bolted-down, rust-proof, 3/8-inch (min.) steel plate with a pedestrian-rated walking surface. The plate shall be recessed into the concrete sidewalk from face of curb to the property line. The plate must be secured to the concrete with bolts and flush with the top of sidewalk. A center support maybe added depending on the width of the flume. Fences must be kept behind the curb line of the flume. Where a structural overflow is not feasible, a variance must be requested from Storm Water Manager. If no structural overflow is constructed, the sump inlets must be designed with a 50% clogging factor. In a cul-de-sac where no structural overflow is feasible, additional on-grade inlet capacity may be provided upstream of the sump in lieu of additional sump inlets.

An explanation of the Inlets in Sumps Calculation Sheet is included in Section 5.3.1.

Inlets on Grade with Gutter Depression (Type CO-D)
The hydraulic efficiency of storm-water inlets varies with gutter flow, street grade, street crown, and with the geometry of the inlet depression. The design flow into any inlet can be greatly increased if a small amount (5 to 10 percent) of gutter flow is allowed to flow past the inlet. When designing inlets, freedom from clogging or from interference with traffic often takes precedence over hydraulic considerations. See Sections 5.3.1 for computation sheet for Type CO-D inlet.

The depression of the gutter at a curb opening inlet (See Figure 5.3) below the normal level of the gutter increases the cross-flow towards the opening, thereby increasing the inlet capacity. Also, the downstream transition out of the depression causes backwater which further increases the amount of water captured. Depressed inlets should be used on all public streets and alleys. Recessed depressed inlets should be used on all arterials.

The capacity of a depressed curb inlet on grade will be based on the methodology presented in Section 1.2.7 of the iSWM Hydraulics Technical Manual.

Drop Inlets (Area Drains)
1. Drop inlets serving a drainage area of 10 to 25 acres will be designed with a 50% clogging factor.
2. Grading plans to direct flow into drop inlets will be included in the construction plans and Community Facilities Agreement documents. Where earthen swales or other means of collecting and directing runoff into drop inlets are needed, they should be contained in appropriately sized drainage easements.
3. Consideration should be given to a structural overflow in the same manner as described for sump inlets.
4. Drop inlets shall be located where they can be easily accessed for inspection and maintenance by the City.

Headwalls

1. A headwall will be used to collect a drainage area of 25 acres or more flowing to one spot.
2. Areas that have been channelized or discharged from a storm drain system will use a headwall to reintroduce the flow to a new storm drain system. These provisions do not apply to special multi-stage outlet structures draining detention facilities.

Design Criteria

Streets and ROW

Depth in the street shall not exceed top of curb or maximum flow spread limits for the conveyance storm. The flood mitigation storm shall be contained within the right-of-ways or easements.

Parking Lots

Parking lots shall be designed for the conveyance storm not to exceed top of curb with maximum ponding at low points of one (1) foot. The flood mitigation storm shall be contained on-site or within dedicated easements.

Flow Spread Limits

Inlets shall be spaced so that the spread of flow in the street for the conveyance storm shall not exceed the guidelines listed below, as measured from the gutter or face of the curb:

Table 14.3.7 Flow Spread Limits

Street Classification	Allowable Encroachment
Collectors, Arterial, and Thoroughfares (greater than 2-lanes)	8 feet or one travel lane, both sides for a divided roadway
Residential Streets	curb depth or maximum 6 inches at gutter

Local Provisions: Spread of water refers to the amount of water that is allowed to collect in streets during a storm of 5-year design frequency. In order that excess stormwater will not collect in streets or thoroughfares during a storm of the design frequency, the following spread of water values shall be used for the various types of streets.

Arterials (Divided)

1. **Permissible Spread of Water**-The permissible spread of water in gutters of major divided thoroughfares shall be limited so that one traffic lane on each side remains clear during the 5-year storm. Gutter flow shall be based on maximum storm duration of 15 minutes.
2. **Conditions**-Inlets shall preferably be located at street intersections, at low points of grade or where the gutter flow exceeds the permissible spread of water criteria. Inlets shall be located, when possible, on side streets when grades permit. In no cases shall the gutter depression at inlets exceed the standard. In super-elevated sections, inlets placed against the center medians shall have no gutter depression and shall intercept gutter flow at the point of vertical curvature to prevent flow from crossing the thoroughfares on the surface in valley gutters or otherwise.

Arterials (Not Divided)

1. **Permissible Spread of Water**-The permissible spread of water in gutters of major undivided thoroughfares shall be limited so that two traffic lanes will remain clear during the 5-year storm. The 100-year storm shall be contained within the R.O.W.
2. **Conditions**-Inlets shall preferably be located at street intersections, low points of grades, or where the gutter flow exceeds the permissible spread of water criteria. Inlets shall be located, when possible, on the side streets when grades permit. In no case shall the gutter depression at inlets

exceed.

3. **Super-elevated Sections**-Intercept gutter flow at P.V.C. or P.V.T. to prevent flow from crossing thoroughfare. Unless expressly approved by the Storm Water Manager, stormwater will not be allowed to cross major thoroughfares on the surface in valley gutters or otherwise.

Collector Streets

1. **Permissible Spread of Water**-The permissible spread of water in gutters of collector streets shall be limited so that one standard lane of traffic will remain clear during the 5-year storm. The 100-year storm shall be contained within the R.O.W.
2. **Conditions**-Inlets shall preferably be located at street intersections, low points of grade or where the gutter flow exceeds the permissible spread of water criteria. Inlets shall be located, when at all possible, on the side streets when grade permits. Inlets with the standard gutter depression shall be used. In no case shall the gutter depression at inlets exceed the standard.

Minor Streets (Residential)

1. **Permissible Spread of Water**-The permissible spread of water in gutters for minor streets shall be limited by the height of the curb for 5-year storms. The 100-year storm shall be contained within the R.O.W.
2. **Conditions**-Inlets shall be located at street intersections, low points of grade or where the gutter flow exceeds the permissible spread of water criteria. Inlets with depressed standard gutter depression shall be used in all cases unless special grading problems are involved. In no case shall the gutter depression at inlets exceed the standard.

Must use roadway sections as approved by City of Azle.

Storm Drain Pipe Design

Design Frequency

- Pipe Design: conveyance storm event within pipe with hydraulic grade line (HGL) below throat of inlets
- ROW and Easements: flood mitigation storm event must be contained within the ROW or easement

Local Provisions: City of Azle pipe design frequency is the 100-year storm less any gutter, roadway, and flume flows.

Design Criteria

- For ordinary conditions, storm drain pipes shall be sized on the assumption that they will flow full or practically full under the design discharge but will not be placed under pressure head. The Manning Formula is recommended for capacity calculations.

- The maximum hydraulic gradient shall not produce a velocity that exceeds 15 feet per second (fps). Table 3.8 shows the desirable velocities for most storm drainage design. Storm drains shall be designed to have a minimum mean velocity flowing full at 2.5 fps.

Table 14.3.8 Desirable Velocity in Storm Drains

Description	Maximum Desirable Velocity
Culverts (All types)	15 fps
Storm Drains (Inlet laterals)	No Limit
Storm Drains (Collectors)	15 fps
Storm Drains (Mains)	12 fps

- The minimum desirable physical slope shall be 0.5% or the slope that will produce a velocity of 2.5 feet per second when the storm sewer is flowing full, whichever is greater.

- If the potential water surface elevation exceeds 1 foot below ground elevation for the design flow, the top of the pipe, or the gutter flow line, whichever is lowest, adjustments are needed in the system to reduce the elevation of the hydraulic grade line.
- Access manholes are required at intermediate points along straight runs of closed conduits. Table 3.9 gives maximum spacing criteria.

Table 14.3.9 Access Manhole Spacing Criteria
(HEC 22, 2001)

Pipe Size (inches)	Maximum Spacing (feet)
12-24	300
27-36	400
42-54	500
60 and up	1000

Local Provisions: This section replaces the Closed Conduit System sections 1.2.9, most of 1.2.10, and 1.2.11 of the iSWM Hydraulics Technical Manual. Storm Drain Outfalls located within section 1.2.10 (page HA-45) is adopted

Velocities and Grades
Storm drains should operate with velocities of flow sufficient to prevent excessive deposits of solid materials; otherwise objectionable clogging may result. The controlling velocity is near the bottom of the conduit and considerably less than the mean velocity of the sewer. Storm drains shall be designed to have a minimum mean velocity flowing full of 2.5 fps. The table of Minimum Grades for Storm Drains indicates the minimum grades for concrete pipe (n = 0.013), flowing at 2.5 fps.

Velocities in sewers are important mainly because of the possibilities of excessive erosion on the storm drain inverts. Table 3.8 shows the desirable velocities for most storm drainage design. Velocities in excess of those shown on this table must be approved by the Storm Water Manager. Supercritical flow in main lines should be avoided unless approved by the Storm Water Manager

Table 3.9A Minimum Grades For Storm Drains

Pipe Size (Inches)	Concrete Pipe Slope Ft./Ft.
18	0.0018
24	0.0013
27	0.0011
30-96	0.0010

Materials
Only reinforced concrete pipe is allowed under pavement for public storm drains in the City of Azle:

In selecting roughness coefficients for concrete pipe, consideration will be given to the average conditions at the site during the useful life of the structure. The ‘n’ value of 0.015 for concrete pipe shall be used primarily in analyzing old sewers where alignment is poor and joints have become rough. If, for example, concrete pipe is being designed at a location where it is considered suitable, and there is reason to believe that the roughness would increase through erosion or corrosion of the interior surface, slight displacement of joints or entrance of foreign materials. A roughness coefficient will be

selected which in the judgment of the designer, will represent the average condition. Any selection of 'n' values below the minimum or above the maximum, either for monolithic concrete structures, concrete pipe or HDPE, will have to have written approval of the Storm Water Manager

The recommended coefficients of roughness listed in Table 3.9B below and are for use in the nomographs contained herein, or by direct solution of Manning's Equation.

Table 14.3.9B Manning's Coefficients for Storm Drain Conduits*

Type of Storm Drain	Manning's n
Concrete Pipe (Design n = 0.013)	0.012-0.015
Concrete Boxes (Design n = 0.015)	0.012-0.015
Corrugated Metal Pipe, Pipe-Arch and Box (Annular or Helical Corrugations - see Table 1.8 in iSWM Hydraulics Technical Manual. **NOTE: CITY OF AZLE DOES NOT ALLOW CMP FOR NEW CONSTRUCTION**	0.022-0.037
Profile Wall Thermoplastic High Density Polethylene (HDPE) or Polyvinyl Chloride (PVC) **NOTE: CITY OF AZLE DOES NOT ALLOW HDPE OR PVC FOR NEW CONSTRUCTION**	0.010-0.013
*NOTE: Actual field values for conduits may vary depending on the effect of abrasion, corrosion, deflection, and joint conditions.	

Manholes
Manholes shall be located at intervals not to exceed 1000 feet for pipe 48 inches in diameter and larger. Manholes must be installed at the upstream end of a system and whenever a storm drain leaves the pavement, unless the outfall is within 50 feet of the roadway and directly accessible. Manholes shall preferably be located at street intersections, sewer junctions, changes of grade and changes of alignment. When the storm drain is a concrete box instead of an RCP, four-foot diameter manhole risers may be installed instead of vaults to provide access. In all cases, steps shall be installed to the flowline of the pipe.

See Section 5.3 for the City of Azle requirements on Stormwater Inlets, Minor Head Losses at Structures, Storm Drain Design Examples, and General Construction Standards for Closed Conduit Systems.

Full or Part Full Flow in Storm Drains
All storm drains shall be designed by the application of the Continuity Equation and Manning's Equation either through the appropriate charts or nomographs or by direct solutions of the equations as follows:

$Q = A V$, and

$Q = \frac{1.486}{n} A r^{2/3} S_f^{1/2}$, where

Q = Runoff in cubic feet per second.

A = Cross-sectional area of pipe or channel.

V = Velocity of flow.

n = Coefficient of roughness of pipe or channel.

r = Hydraulic radius = $\frac{A}{P}$

S_f = friction slope in feet per foot in pipe or channel.

P = Wetted perimeter.

The size of pipe required to transport a known-quantity of storm runoff is obtained by substituting known values in the formula. In practice, the formula is best utilized in the preparation of a pipe flow chart which interrelates values of runoff, velocity, slope, and pipe geometry. With two of these variables known or assumed. The other two are quickly obtained from the chart. A pipe flow nomograph for circular conduits flowing full graphs is shown in iSWM Hydraulics Technical Manual Figure 1.17. Nomographs for flow in conduits of other cross-sections are available in TxDOT Hydraulic Design Manual, dated March 2004, Chapter 6, and Section 2. For circular conduits flowing partially full, graphs are presented in iSWM Hydraulics Technical Manual Figure 1.19a.

Hydraulic Gradient and Profile of Storm Drain

In storm drain systems flowing full (or partially full as discussed above) all losses of energy through resistance with flow in pipes, by changes of momentum or by interference with flow patterns at junctions, must be accounted for by accumulative head losses along the system from its initial upstream inlet to its outlet. The purpose of accurate determinations of head losses at junctions is to include these values in a progressive calculation of the hydraulic gradient along the storm drain system. In this way, it is possible to determine the water surface elevation which will exist at each structure. The rate of loss of energy through the storm drain system shall be represented by the hydraulic grade line, which measures the pressure head available at any given point within the system.

The hydraulic grade line (HGL) shall be established for all storm drainage design in which the system operates under a head. The hydraulic grade line is often controlled by the conditions of the sewer outfall; therefore, the elevation of the tailwater must be known. The hydraulic gradient is constructed upstream from the downstream end, taking into account all of the head losses that may occur along the line. The iSWM Hydraulics Technical Manual Table 1.10 provides a table of coincident design frequencies to assist with tailwater determination. The hydraulic gradient shall begin at the higher of the tailwater or depth of flow in the pipe at the downstream end.

All head losses shall be calculated if the storm drain system is in a sub critical flow regime whether the system is flowing partially full or surcharged. Hydraulic calculations shall reflect partially full pipe where appropriate. Supercritical flow is allowed in main lines only with the approval of the Storm Water Manager. If the system is in supercritical regime the section should be marked “SUPERCRITICAL FLOW.” The presence of supercritical regime should be confirmed by analyzing from downstream as well as upstream.

The friction head loss shall be determined by direct application of Manning’s Equation or by appropriate nomographs or charts as discussed in the first paragraph of this subsection. Minor losses due to turbulence at structures shall be determined by the procedure of last subsection of this section (“Minor Headlosses at Structures”) or in the iSWM Hydraulics Technical manual. All HGL calculations will be carried upstream to the inlet.

The hydraulic grade line shall in no case be above the surface of the ground or street gutter for the design storm. Allowance of head must also be provided for future extensions of the storm drainage system. In all cases the maximum HGL must be 12” below top of curb at any inlet.

Minor Head Losses at Structures

Section 5.3.2 contains detailed information on the calculation of minor head losses at structures. Figures 5.6 and 5.7 provide details of minor losses for manholes, wye branches, and bends in the design of closed conduits. Minimum head loss used at any structure shall be 0.10 foot.

Storm Drain Design Examples

Section14.5.3.3 presents an example of storm drain design.

Hydrologic Methodology with MWH InfoWorks/SWMM Programs
InfoWorks SD by MWH Soft and the Stormwater Management Model (SWMM) family of programs have been applied to several complex storm sewer systems in the City of Azle. These programs include several hydrologic subarea runoff procedures. In addition to the hydrologic methods described in Chapter 3 , the City of Azle accepts the following procedures when applying these programs:

- With case-by-case approval by the Storm Water Manager, the SWMM Method in which the flow is routed using a single linear reservoir, whose routing coefficient depends on surface roughness (Manning's n), surface area, ground slope and catchment width.
- A version of the Unit Hydrograph Method in which a triangular unit hydrograph is developed using the time to peak (time of concentration times 0.6), total runoff time (time to peak times 2.67) and the peak of the unit hydrograph (2 divided by total runoff time).

14.3.6.3Hydraulic Design Criteria for Structures

Introduction

This section is intended to provide design criteria and guidance on several on-site flood mitigation system components, including culverts, bridges, vegetated and lined open channels, storage design, outlet structures, and energy dissipation devices for outlet protection.

Open Channels

Design Frequency

- Open channels, including all natural or structural channels, swales, and ditches shall be designed for the flood mitigation storm event
- Channels shall be designed with multiple stages. A low flow channel section containing the streambank protection flows and a high flow section that contains the conveyance and flood mitigation storms will improve stability and better mimic natural channel dimensions.

Local Provisions: 100-year design storm for fully developed watershed conditions. Channels may be designed with multiple stages (e.g., a "low-flow" or "trickle" channel section for common recurring flows, and a high flow section that contains the design discharge). The "low-flow" or "trickle" channel shall convey 2% of the design 100-year discharge.

Design Criteria

- Trapezoidal channels shall have a minimum channel bottom width of 6 feet.
- Channels with bottom widths greater than 6 feet shall be designed with a minimum bottom cross slope of 12 to 1 or with compound cross sections.
- Channel side slopes shall be stable throughout the entire length and the side slope shall depend on the channel material. Channel side slopes and roadside ditches with a side slope steeper than 3:1 shall require detailed geotechnical and slope stability analysis to justify slopes steeper than 3:1. However, any slope that is less than 3:1 needs a detailed analysis to prove that it can be done.
- Trapezoidal or parabolic cross sections are preferred over triangular shapes.
- For vegetative channels, design stability shall be determined using low vegetative retardance conditions (Class D). For design capacity, higher vegetative retardance conditions (Class C) shall be used.

- For vegetative channels, flow velocities within the channel shall not exceed the maximum permissible velocities given in Tables 3.10 and 3.11.
- If relocation of a stream channel is unavoidable, the cross-sectional shape, meander, pattern, roughness, sediment transport, and slope shall conform to the existing conditions insofar as practicable. Energy dissipation will be necessary when existing conditions cannot be duplicated.
- Streambank stabilization shall be provided, when appropriate, as a result of any stream disturbance such as encroachment and shall include both upstream and downstream banks as well as the local site.
- HEC-RAS, or similarly capable software approved by the entity with jurisdiction, shall be used to confirm the water surface profiles in open channels.
- The final design of artificial open channels shall be consistent with the velocity limitations for the selected channel lining. Maximum velocity values for selected lining categories are presented in Table 3.10. Seeding and mulch shall only be used when the design value does not exceed the allowable value for bare soil. Velocity limitations for vegetative linings are reported in Table 3.11. Vegetative lining calculations and stone riprap procedures are presented in *Section 3.2 of the Hydraulics Technical Manual*.
- For gabions, design velocities range from 10 fps for 6-inch mattresses up to 15 fps for 1-foot mattresses. Some manufacturers indicate that velocities of 20 fps are allowable for basket installations. The design of stable rock riprap lining depends on the intersection of the velocity (local boundary shear) and the size and gradation of the riprap material. More information on calculating acceptable riprap velocity limits is available in *Section 3.2.7 of the Hydraulics Technical Manual*.

Local Provisions:

Normal Depth (Uniform Flow):
For uniform flow calculations, the theoretical channel dimensions, computed by the slope-area methods outlined in the iSWM manual, are to be used only for an initial dimension in the design of an improved channel. Exceptions will be for small outfall channels (with the approval of the Storm Water Manager) with the following options:

- Completely contained on the development site for on-site drainage;
- Where no off-site drainage easement is required (i.e. not crossing or adjacent to another property that could be flooded if design storm occurs).
- No nearby downstream restrictions.

Backwater Profile (Gradually Varied Flow):

City of Azle requires a hand computed or HEC-RAS backwater/frontwater analysis on any proposed open channel to determine the actual tailwater elevations, channel capacity and freeboard, and impacts on adjacent floodplains. If a stream or creek has an effective FEMA model, the engineer will be required to use a computer program for the analysis. If the current effective FEMA model for the stream is a HEC-2 model, the engineer has the option to either use that model, or convert to HEC-RAS for analysis of proposed conditions.

Supercritical Flow Regime
Supercritical flow will not be allowed except under unusual circumstances, with special approval of the City staff. However, for lined channels, the hand computed frontwater or HEC-RAS analysis should include a mixed-flow regime analysis, to make sure no supercritical flow occurs. City of Azle requires that the computed flow depths in designed channels be outside of the range of instability, i.e. depth of flow should be at least 1.1 times critical depth.

Channel Transitions or Energy Dissipation Structures or Small Dams

A HEC-RAS model or complete hand computed backwater analysis is a standard requirement for design of channel transitions (upstream and downstream), energy dissipation structures, and small dams. A backwater analysis will be required by the City of Azle, either hand computed or HEC-RAS, to determine accurate tailwater elevation, headlosses, headwater elevations and floodplains affected by the proposed transition into and out of an improved channel, any on-stream energy dissipating structures, and small dams (less than 6 feet). If the current effective FEMA model for the stream is a HEC-2 model, the engineer has the option to either use that model, or convert to HEC-RAS for analysis of proposed conditions. For larger dams, a hydrologic routing will be required, as well as hydraulic analysis, to determine impacts of the proposed structure on existing floodplains and adjacent properties.

General Criteria

Earthen Channels

1. An earthen channel shall have a trapezoidal shape with side slopes not steeper than a 4:1 ratio and a channel bottom at least four (4) feet in width.
2. One (1) foot of freeboard above the 100-year frequency ultimate development water surface elevation must be available within all designed channels at all locations along the channel.
3. The side slopes and bottom of an earthen channel shall be smooth, free of rocks, and contain a minimum of six (6) inches of topsoil. The side slopes and channel bottom shall be re-vegetated with grass. No channel shall be accepted for maintenance by the City until a uniform (e.g., evenly distributed, without large bare areas) vegetative cover with a density of 70% has been established.
4. The Storm Water Manager may require each reach of a channel to have a ramp for maintenance access. Ramps shall be at least ten (10) feet wide and have 15% maximum grade. Twelve-foot (12') channel width is required if ramp is deemed necessary by Storm Water Manager.
5. Minimum channel slope is 0.0020 ft/ft unless approved by the Storm Water Manager.
6. Erosion protection to be provided at outfall to the receiving stream.

Lined Channels

1. Channels shall be trapezoidal in shape and lined with reinforced concrete in accordance with City Standards and Specifications with side slopes of two (2) foot horizontal to one (1) foot vertical or otherwise to such standards, shape and type of lining as may be approved by the Storm Water Manager. The lining shall extend to and include the water surface elevation of the 100 year design storm plus one foot freeboard above the 100 year water surface elevation.
2. The channel bottom must be a minimum of four (4) feet in width. (Overflow structures for storm sewer system sumps may have a minimum bottom width of 6 feet.).
3. The maximum water flow velocity in a lined channel shall be fifteen (15) feet per second except that the water flow shall not be supercritical in an area from 100' upstream from a bridge to 25' downstream from a bridge. Hydraulic jumps shall not be allowed from the face of a culvert to 50' upstream from that culvert. In general channels having supercritical flow conditions are discouraged.
4. Whenever flow changes from supercritical to subcritical channel protection shall be provided to protect from the hydraulic jump that is anticipated (see comment in Item 3).
5. The design of the channel lining shall take into account the superelevation of the water surface around curves and other changes in direction.
6. A chain link fence six (6) feet in height or other fence may be required by the Storm Water Manager and shall be constructed on each side of the concrete or gabion channel lining.
7. The Storm Water Manager may require a geotechnical study and /or an underground drainage system design for concrete lined channels.

Roadside Ditches

Design Storms

1. A roadside ditch ("rural") street section is permissible only as specifically approved by the Storm Water Manager. No median ditches are allowed.
2. The design storm for the roadside ditches shall be the 100-year storm. The 100-year flow shall not

exceed the right-of-way capacity defined as the natural ground at the right-of-way line or top of roadside ditch.

Design Considerations

1. For grass lined sections, the maximum design velocity shall be 6.0 feet per second during the 100-year design storm (Higher velocities justified by a sealed geotechnical study).
2. A grass lined or unimproved roadside ditch shall have minimum 2 foot bottom width and side slopes no steeper than four horizontal to one vertical. There shall be a four-foot strip at maximum 2% cross slope between the edge of pavement and the beginning of the ditch.
3. Minimum grades for roadside ditches shall be 0.0050 foot/foot (0.50%).
4. Manning's roughness coefficient for analysis and design of roadside ditches are presented in Section 3.2.3 in the iSWM Hydraulics Technical Manual.
5. Erosion protection will be provided at the upstream and downstream ends of all culverts.
6. Maximum depth will not exceed 4 feet from center-line of pavement except as specifically approved by Storm Water Manager.
7. If the ditch extends beyond the right-of-way line, an additional drainage easement shall be dedicated extending at least 2 feet beyond the top of bank. Utility easements must be separate and beyond any drainage easements.
8. Hydraulic analysis of roadside ditches will require a HEC-RAS analysis.

Culverts in Roadside Ditches

1. Culverts will be placed at all driveway and roadway crossings and other locations where appropriate.
2. Erosion protection will be provided at all driveway and roadway crossings and other locations where appropriate.
3. Roadside culverts are to be sized based on drainage area, assuming inlet control. Calculations are to be provided for each block based on drainage calculations. The size of culvert used shall not create a head loss of more than 0.20 feet greater than the normal water surface profile without the culvert.
4. Roadside ditch culverts will be no smaller than 24 inches inside diameter or equivalent for roadway crossings and 18 inches for driveway culverts.
5. A driveway culvert schedule shall be included on the face of the plat. It shall include for each lot approximate culvert flowline depth below top of pavement, number and size of pipe required, and horizontal distance from edge of pavement to center of culvert (based on horizontal control requirements above).

Channel Velocity Limitations

Maximum allowable:

- Lined Channels – Maximum velocities = 15 fps. Exceptions can be granted by the Storm Water Manager, with justifiable, technical reasons.
- Grass Lined Channels – Maximum velocities = 6 fps. Higher values can be justified by a sealed geotechnical study/analysis of soil type and conditions.

Critical Flow Calculations

Section 3.2.5 Critical Flow Calculations of the iSWM Hydraulics Technical manual is for reference only.

Vegetative Design

Section 3.2.6 Vegetative Design of the iSWM Hydraulics Technical manual is for reference only.

Stone Riprap Design

Riprap design is to be by Method #2 (Gregory Method) described in Section 3.2.7 of the iSWM Hydraulics Technical Manual. A properly designed geotextile material is required under the granular bedding. Regardless of computed thickness the minimum allowable riprap thickness is 12 inches.

Section 3.2.7 of the iSWM Hydraulics Technical Manual, Stone Riprap Design Method #1: Maynard

and Reese, is for reference only.

Grouted Riprap
The City of Azle will allow grouted stone riprap as an erosion control feature. However, the design thickness of the stone lining will not be reduced by the use of grout. See the U.S. Army Corps of Engineers' design manual ETL 1110-2-334 on design and construction of grouted riprap.

Uniform Flow – Example Problems
Section 3.2.9 Uniform Flow – Example Problems in the iSWM Hydraulics Technical manual are for reference only.

Rectangular, Triangular, and Trapezoidal Open Channel Design
Section 3.2.11 Rectangular, Triangular, and Trapezoidal Open Channel Design – Example Problems in the iSWM Hydraulics Technical manual are for reference only.

Manning Roughness Coefficients for Design

Table 14.3.9C City of Azle Manning's Roughness Coefficients for Design

Lining Type	Manning's n	Comments
Grass Lined	**0.035** **0.050**	**Use for velocity check** **Use for channel capacity check (freeboard check)**
Concrete Lined	**0.015**	
Gabions	**0.030**	
Rock Riprap	**0.040**	**$N = 0.0395d_{50}^{1/6}$ where d_{50} is the stone size of which 50% of the sample is smaller**
Grouted Riprap	**0.028**	**FWHA**

Table 14.3.10 Roughness Coefficients (Manning's n) and Allowable Velocities for Natural Channels

Channel Description	Manning's n	Max. Permissible Channel Velocity (ft/s)
MINOR NATURAL STREAMS		
Fairly regular section		
1. Some grass and weeds, little or no brush	0.030	3 to 6
2. Dense growth of weeds, depth of flow materially greater than weed height	0.035	3 to 6
3. Some weeds, light brush on banks	0.035	3 to 6
4. Some weeds, heavy brush on banks	0.050	3 to 6
5. Some weeds, dense willows on banks	0.060	3 to 6
For trees within channels with branches submerged at high stage, increase above values by	0.010	
Irregular section with pools, slight channel meander, increase above values by	0.010	
Floodplain – Pasture		
1. Short grass	0.030	3 to 6
2. Tall grass	0.035	3 to 6
Floodplain – Cultivated Areas		
1. No crop	0.030	3 to 6
2. Mature row crops	0.035	3 to 6
3. Mature field crops	0.040	3 to 6
Floodplain – Uncleared		

Table 14.3.10 Roughness Coefficients (Manning's n) and Allowable Velocities for Natural Channels

Channel Description	Manning's n	Max. Permissible Channel Velocity (ft/s)
1. Heavy weeds scattered brush	0.050	3 to 6
2. Wooded	0.120	3 to 6
MAJOR NATURAL STREAMS Roughness coefficient is usually less than for minor streams of similar description on account of less effective resistance offered by irregular banks or vegetation on banks. Values of "n" for larger streams of mostly regular sections, with no boulders or brush	Range from 0.028 to 0.060	3 to 6
UNLINED VEGETATED CHANNELS		
Clays (Bermuda Grass)	0.035	5 to 6
Sandy and Silty Soils (Bermuda Grass)	0.035	3 to 5
UNLINED NON-VEGETATED CHANNELS		
Sandy Soils	0.030	1.5 to 2.5
Silts	0.030	0.7 to 1.5
Sandy Silts	0.030	2.5 to 3.0
Clays	0.030	3.0 to 5.0
Coarse Gravels	0.030	5.0 to 6.0
Shale	0.030	6.0 to 10.0
Rock	0.025	15
For natural channels with specific vegetation type, refer to Table 3.11 for more detailed velocity control.		

Table 14.3.11 Maximum Velocities for Vegetative Channel Linings

Vegetation Type	Slope Range (%)[1]	Maximum Velocity[2] (ft/s)
Bermuda grass	0-5	6
Bahia		4
Tall fescue grass mixtures[3]	0-10	4
Kentucky bluegrass	0-5	6
Buffalo grass	5-10 >10	5 4
Grass mixture	0-5[1] 5-10	4 3
Sericea lespedeza, Weeping lovegrass, Alfalfa	0-5[4]	3
Annuals[5]	0-5	3
Sod		4
Lapped sod		5

[1] Do not use on slopes steeper than 10% except for side-slope in combination channel.
[2] Use velocities exceeding 5 ft/s only where good stands can be maintained.
[3] Mixtures of Tall Fescue, Bahia, and/or Bermuda
[4] Do not use on slopes steeper than 5% except for side-slope in combination channel.
[5] Annuals - used on mild slopes or as temporary protection until permanent covers are established.

Source: Manual for Erosion and Sediment Control in Georgia, 1996.

Vegetative Design

- A two-part procedure is required for final design of temporary and vegetative channel linings.
  - Part 1, the design stability component, involves determining channel dimensions for low vegetative retardance conditions, using Class D as defined in Table 3.12.
  - Part 2, the design capacity component, involves determining the depth increase necessary to maintain capacity for higher vegetative retardance conditions, using Class C as defined in Table 3.12.
- If temporary lining is to be used during construction, vegetative retardance Class E shall be used for the design stability calculations.
- If the channel slope exceeds 10%, or a combination of channel linings will be used, additional procedures not presented below are required. References include HEC-15 (USDOT, FHWA, 1986) and HEC-14 (USDOT, FHWA, 1983).

Local Provisions: For reference only.

Table 14.3.12 Classification of Vegetal Covers as to Degrees of Retardance

Retardance Class	Cover	Condition
A	Weeping Lovegrass	Excellent stand, tall (average 30")
	Yellow Bluestem Ischaemum	Excellent stand, tall (average 36")
B	Kudzu	Very dense growth, uncut
	Bermuda grass	Good stand, tall (average 12”)
	Native grass mixture Little bluestem, bluestem, blue gamma other short and long stem Midwest grasses	Good stand, unmowed
	Weeping lovegrass	Good stand, tall (average 24”)
	Laspedeza sericea	Good stand, not woody, tall (average 19”)
	Alfalfa	Good stand, uncut (average 11”)
	Weeping lovegrass	Good stand, unmowed (average 13”)
	Kudzu	Dense growth, uncut
	Blue gamma	Good stand, uncut (average 13”)
C	Crabgrass	Fair stand, uncut (10 – 48”)
	Bermuda grass	Good stand, mowed (average 6”)
	Common lespedeza	Good stand, uncut (average 11”)
	Grass-legume mixture: summer (orchard grass redtop, Italian ryegrass, and common lespedeza)	Good stand, uncut (6 – 8 “)
	Centipede grass	Very dense cover (average 6”)
	Kentucky bluegrass	Good stand, headed (6 – 12”)
D	Bermuda grass	Good stand, cut to 2.5”
	Common lespedeza	Excellent stand, uncut (average 4.5”)
	Buffalo grass	Good stand, uncut (3 – 6”)

	Grass-legume mixture: fall, spring (orchard grass, redtop, Italian ryegrass, and common lespedeza)	Good stand, uncut (4 – 5”)
	Lespedeza serices	After cutting to 2” (very good before cutting)
E	Bermuda grass	Good stand, cut to 1.5”
	Bermuda grass	Burned stubble

Note: Covers classified have been tested in experimental channels. Covers were green and generally uniform.
Source: HEC-15, 1988.

Culverts

Design Frequency

Culverts are cross drainage facilities that transport runoff under roadways or other improved areas.

- Culverts shall be designed for the flood mitigation storm or in accordance with TxDOT requirements, whichever is more stringent. Consideration when designing culverts includes: roadway type, tailwater or depth of flow, structures, and property subject to flooding, emergency access, and road replacement costs.
- The flood mitigation storm shall be routed through all culverts to be sure building structures (e.g., houses, commercial buildings) are not flooded or increased damage does not occur to the highway or adjacent property for this design event.

Local Provisions:

100-year storm for fully developed watershed conditions, or in accordance with TxDOT requirements, whichever is more stringent. For multiple barrel culverts the City of Azle encourages the placement of one of the barrels at the flowline of the stream with the other barrels at a higher elevation to encourage a single flow path for lower flow and reduce sediment and debris accumulation. Where practical the low-flow portion of the low barrel(s) should convey 2% of the design 100-year discharge.

Design Criteria

Velocity Limitations

- The maximum velocity shall be consistent with channel stability requirements at the culvert outlet.
- The maximum allowable velocity for corrugated metal pipe is 15 feet per second. There is no specified maximum allowable velocity for reinforced concrete pipe, but outlet protection shall be provided where discharge velocities will cause erosion conditions.
- To ensure self-cleaning during partial depth flow, a minimum velocity of 2.5 feet per second is required for the streambank protection storm when the culvert is flowing partially full.

Length and Slope

- The maximum slope using concrete pipe is 10% and for CMP is 14% before pipe-restraining methods must be taken.
- Maximum vertical distance from throat of intake to flowline in a drainage structure is 10 feet.
- Drops greater than 4 feet will require additional structural design.

Headwater Limitations

- The *allowable headwater* is the depth of water that can be ponded at the upstream end of the culvert during the design flood, which will be limited by one or more of the following constraints or conditions:
    1. Headwater will be non-damaging to upstream property.

2. Culvert headwater plus 12 inches of freeboard shall not exceed top of curb or pavement for low point of road over culvert, whichever is lower.
3. Ponding depth will be no greater than the elevation where flow diverts around the culvert.
4. Elevations will be established to delineate floodplain zoning.

- The headwater shall be checked for the flood mitigation storm elevation to ensure compliance with flood plain management criteria and the culvert shall be sized to maintain flood-free conditions on major thoroughfares with 12-inch freeboard at the low-point of the road.
- Either the headwater shall be set to produce acceptable velocities or stabilization/energy dissipation shall be provided where these velocities are exceeded.
- In general, the constraint that gives the lowest allowable headwater elevation establishes the criteria for the hydraulic calculations.

Tailwater Considerations

- If the culvert outlet is operating with a free outfall, the critical depth and equivalent hydraulic grade line shall be determined.
- For culverts that discharge to an open channel, the stage-discharge curve for the channel must be determined. See Section 2.1.4 of the Hydraulics Technical Manual on methods to determine a stage-discharge curve.
- If an upstream culvert outlet is located near a downstream culvert inlet, the headwater elevation of the downstream culvert will establish the design tailwater depth for the upstream culvert.
- If the culvert discharges to a lake, pond, or other major water body, the expected high water elevation of the particular water body will establish the culvert tailwater.

Other Criteria

- In designing debris control structures, the Hydraulic Engineering Circular No. 9 entitled Debris Control Structures or other approved reference is required to be used.
- If storage is being assumed or will occur upstream of the culvert, refer to Section 2.0 of the Hydraulics Technical Manual regarding storage routing as part of the culvert design.
- Reinforced concrete pipe (RCP), pre-cast and cast in place concrete boxes are recommended for use (1) under a roadway, (2) when pipe slopes are less than 1%, or (3) for all flowing streams. RCP and fully coated corrugated metal pipe or high-density polyethylene (HDPE) pipe may also be used in open space areas.
- Culvert skews shall not exceed 45 degrees as measured from a line perpendicular to the roadway centerline without approval.
- The minimum allowable pipe diameter shall be 18 inches.
- Erosion, sediment control, and velocity dissipation shall be designed in accordance with Section 4.0 of the Hydraulics Technical Manual.

Local Provisions: City of Azle requires a backwater analysis, by hand, or HEC-RAS to evaluate the proposed structure for final design. The Culvert Hydraulics Checklist Appendix A – City of Azle Detailed Checklists (Form CITY OF AZLE-4) should be completed for each design.

Nomographs
Nomographs are not allowed by City of Azle for final sizing of culverts. The reference for nomographs is FHWA HDS-5. A backwater analysis using HEC-RAS is required.

Culvert Design Example
Section 3.3.5 Culvert Design Example of the iSWM Hydraulics Technical manual is adopted with the following modifications. The (nomographs) procedure is acceptable for preliminary sizing only.

Design Procedures for Beveled-Edged Inlets
Section 3.3.6 Design Procedures for Beveled-Edged Inlets of the iSWM Hydraulics Technical manual is adopted with the following modifications. The procedure is acceptable for preliminary sizing only.

Flood Routing and Culvert Design
Section 3.3.7 Flood Routing and Culvert Design of the iSWM Hydraulics Technical Manual is for reference only.

Erosion, Sediment Control, Velocity Dissapation

See iSWM Hydraulics Technical Manual Section 3.2.7, Gregory Method for culvert outfall protection for riprap sizing, gradation, and bedding. Use Section 4.0 of that Manual for spatial dimensions of riprap and other energy dissipation design.

Bridges

Design Frequency
Bridges are cross drainage facilities with a span of 20 feet or larger.

- Flood mitigation storm for all bridges

Local Provisions: 100-year storm for fully developed watershed conditions or in accordance with TxDOT requirements, whichever is more stringent.

Design Criteria

- A freeboard of two feet shall be maintained between the computed design water surface and the low chord of all bridges.
- The contraction and expansion of water through the bridge opening creates hydraulic losses. These losses are accounted for through the use of loss coefficients. Table 3.13 gives recommended values for the Contraction (K_c) and Expansion (K_e) Coefficients.

Table 14.3.13 Recommended Loss Coefficients for Bridges

Transition Type	Contraction (K_c)	Expansion (K_e)
No losses computed	0.0	0.0
Gradual transition	0.1	0.3
Typical bridge	0.3	0.5
Severe transition	0.6	0.8

Additional design guidance is located in *Section 3.4 of the Hydraulics Technical Manual*.

Local Provisions: A backwater analysis using HEC-RAS is used for final design of the proposed structure. For bridges up to 100' width (measured at low chord), 2' of freeboard required; for bridge >100' width, 1' of freeboard required. Exceptions on freeboard must be approved by City of Azle. Complete Bridge Hydraulics Documentation Checklist (Appendix A – City of Azle Detailed Checklists,

Form CITY OF AZLE-5).

Backwater analysis will be required using HEC-RAS, for any proposed bridge, to determine accurate tailwater elevations, velocities, headlosses, headwater elevations, profiles and floodplains affected by the proposed structure. If the current effective FEMA model is a HEC-2 model, the engineer has the option to either use that model, or convert to HEC-RAS for analysis of proposed conditions.

Detention Structures

Design Frequency

Detention structures shall be designed for the three storms (streambank protection, conveyance, and flood mitigation storms) for the critical storm duration that results in the maximum (or near maximum) peak flow.

Local Provisions: 1-, 10-, and 100-year storm for the critical storm duration (i.e. 3 hour, 6 hour or 24 hour duration) that results in the maximum (or near maximum) peak flow. Analysis should consider both existing watershed plus developed site conditions and fully developed watershed conditions.

Design Criteria

- Dry detention basins are sized to temporarily store the volume of runoff required to provide flood protection up to the flood mitigation storm, if required.
- Extended detention dry basins are sized to provide extended detention of the streambank protection volume over 24 hours and can also provide additional storage volume for normal detention (peak flow reduction) of the flood mitigation storm event.
- Routing calculations must be used to demonstrate that the storage volume and outlet structure configuration are adequate. See *Section 2.0 of the Hydraulics Technical Manual* for procedures on the design of detention storage.
- Detention Basins shall be designed with an 8 foot wide maintenance access.
- No earthen (grassed) embankment slopes shall exceed 4:1.
- A freeboard of 1 foot will be required for all detention ponds.
- A calculation summary shall be provided on construction plans. For detailed calculations of unit hydrograph studies, a separate report shall be provided to the municipality for review and referenced on the construction plans. Stage-storage-discharge values shall be tabulated and flow calculations for discharge structures shall be shown on the construction plans.
- An emergency spillway shall be provided at the flood mitigation maximum storage elevation with sufficient capacity to convey the flood mitigation storm assuming blockage of the outlet works with six inches of freeboard. Spillway requirements must also meet all appropriate state and Federal criteria.
- A landscape plan shall be provided for all detention ponds.
- All detention basins shall be stabilized against significant erosion and include a maintenance plan.
- Design calculations will be provided for all spillways and outlet structures.
- Maintenance agreements shall be included for all detention structures.
- Storage may be subject to the requirements of the Texas Dam Safety Program (see iSWM Program Guidance) based on the volume, dam height, and level of hazard.
- Earthen embankments 6 feet in height or greater shall be designed per Texas Commission on Environmental Quality guidelines for dam safety (see iSWM Program Guidance).

- Vegetated slopes shall be less than 20 feet in height and shall have side slopes no steeper than 2:1 (horizontal to vertical) although 3:1 is preferred. Riprap-protected slopes shall be no steeper than 2:1. Geotechnical slope stability analysis is recommended for slopes greater than 10 feet in height. Vegetated slopes with a side slope steeper than 2:1 shall require detailed geotechnical and slope stability analysis to justify slopes steeper than 2:1.
- Areas above the normal high water elevations of the detention facility should be sloped toward the basin to allow drainage and to prevent standing water. Careful finish grading is required to avoid creation of upland surface depressions that may retain runoff. The bottom area of storage facilities should be graded toward the outlet to prevent standing water conditions. A low flow or pilot channel across the facility bottom from the inlet to the outlet (often constructed with riprap) is recommended to convey low flows and prevent standing water conditions.

Local Provisions: Stormwater detention shall be provided to mitigate increased peak flows in Azle waterways in specific circumstances as defined below. The purpose of the mitigation is to minimize downstream flooding impacts from upstream development. In some instances, detention may be shown to exacerbate potential flooding conditions downstream. Therefore, the "Zone of Influence" criteria shall be applied in addition to these criteria. Design data for dams will be submitted to the City of Azle on Form CITY OF AZLE-6.

1. Detention Basins shall be required for all Development greater than 1 acre in size or when downstream facilities within the "Zone of Influence" are not adequately sized to convey a design storm based on current City criteria for hydraulic capacity.
2. Calculated proposed stormwater discharge from a site shall not exceed the calculated discharges from existing conditions, unless sufficient downstream capacity above existing discharge conditions is available.
3. The Modified Rational Method is allowed for planning and conceptual design for watersheds of 200 acres and less. For final design purposes the Modified Rational Method is allowed only for watersheds of 25 acres and less (see Table 1.2 in the iSWM Hydrologic Manual).
4. Detention Basins draining watersheds over 25 acres shall be designed using a detailed unit hydrograph method acceptable to the City of Azle. These include Snyder's Unit Hydrograph (>100 acres) and SCS Dimensionless Unit Hydrograph (any size). The SCS method is also allowed for basins with watersheds less than 25 acres (see Table 1.2 in the iSWM Hydrologic Manual).
5. Detention Basins shall be designed for the 1-year, 10-year and 100-year storm for the critical storm duration (i.e. 3-hour, 6-hour, or 24-hour storm duration) that results in the maximum (or near maximum) peak flow. Analysis of additional storm (i.e. 5-year, 25-year, etc.) may be required where storm sewers are included in the watershed.
6. No earthen (grassed) embankment slopes shall exceed 4:1. Concrete lined or structural embankment can be steeper with the approval of the Storm Water Manager.
7. A calculation summary shall be provided on construction plans. For detailed calculations of unit hydrograph studies, a separate report shall be provided to the City for review and referenced on the construction plans. Stage-storage-discharge values shall be tabulated and flow calculations for discharge structures shall be shown on the construction plans.
8. An emergency spillway shall be provided at the 100-year maximum storage elevation with sufficient capacity to convey the fully urbanized 100-year storm assuming blockage of the closed conduit portion outlet works with six inches of freeboard. Spillway requirements must also meet all appropriate state and Federal criteria.
9. All detention basins shall be stabilized against significant erosion and include a maintenance plan.
10. State TCEQ rules and regulations regarding impoundments shall be followed. According to current (2009) guidelines, dams fall under the jurisdiction of the TCEQ Dam Safety Program if they meet one or more of the following criteria:
    - i. they have a height greater than or equal to 25 feet and a maximum storage capacity greater than or equal to 15 acre-feet;
    - ii. they have a height greater than 6 feet and a maximum storage capacity greater than or equal to 50 acre-feet.

iii. they are a high or significant hazard dam as defined in the regulations (relating to Hazard Classification Criteria), regardless of height or maximum storage capacity; or
iv. they are used as a pumped storage or terminal storage facility.

11. Design calculations will be provided for all spillways.
12. Maintenance agreements will be provided.
13. In accordance with Texas Water Code §11.142, all permanent surface impoundments not used solely for domestic or livestock purposes must obtain a water rights permit from the TCEQ. A completed permit for the proposed use, or written documentation stating that a permit is not required, must be obtained.
14. Detention basin outlet structures shall be designed to minimize the likeliness of clogging and shall include features to prevent activation of the emergency spillway if such activation would create an uncontrolled discharge. The use of orifice plates or non-standard structures is subject to the approval of the Storm Water Manager.
15. Dry detention basin design should consider multiple uses such as recreation. As such pilot channels should follow the edges of the basin to the extent practical. The bottom of the basin shall have a minimum grade of 1% per Figure 5.9 in Chapter 5, although swales may have minimum grades of 0.5%. Concrete flumes shall be used for main pilot channels shallower than 0.5% slope.

Items 6, 7, 9, 10, 11, 12 and 14 also apply to amenity ponds.

Outlet Structures

Extended detention (ED) orifice sizing is required in design applications that provide extended detention for downstream streambank protection or the ED portion of the water quality protection volume. The release rate for both the WQ_v and SP_v shall discharge the ED volume in a period of 24 hours or longer. In both cases an extended detention orifice or reverse slope pipe must be used for the outlet. For a structural control facility providing both WQ_v extended detention and SP_v control (wet ED pond, micropool ED pond, and shallow ED wetland), there will be a need to design two outlet orifices – one for the water quality control outlet and one for the streambank protection drawdown.

Design Frequency

Water quality storm
Streambank protection storm
Conveyance storm
Flood mitigation storm

Local Provisions: NONE

Design Criteria

- Estimate the required storage volumes for water quality protection, streambank protection, conveyance storm, and flood mitigation.
- Design extended detention outlets for each storm event.
- Outlet velocities shall be within the maximum allowable range based on channel material as shown in Tables 3.10 and 3.11.
- Design necessary outlet protection and energy dissipation facilities to avoid erosion problems downstream from outlet devices and emergency spillway(s).
- Perform buoyancy calculations for the outlet structure and footing. Flotation will occur when the weight of the structure is less than or equal to the buoyant force exerted by the water.

Additional design guidance is located in *Section 2.2 of the Hydraulics Technical Manual.*

Local Provisions: NONE

Energy Dissipation

Design Frequency

All drainage system outlets, whether for closed conduits, culverts, bridges, open channels, or storage facilities, shall provide energy dissipation to protect the receiving drainage element from erosion.

- Conveyance storm
- Flood mitigation storm

Local Provisions: 100-year design storm for fully developed watershed conditions.

Design Criteria

- *Energy dissipaters* are engineered devices such as rip-rap aprons or concrete baffles placed at the outlet of stormwater conveyance systems for the purpose of reducing the velocity, energy and turbulence of the discharged flow.
- Erosion problems at culvert, pipe and engineered channel outlets are common. Determination of the flow conditions, scour potential, and channel erosion resistance shall be standard procedure for all designs.
- Energy dissipaters shall be employed whenever the velocity of flows leaving a stormwater management facility exceeds the erosion velocity of the downstream area channel system.
- Energy dissipater designs will vary based on discharge specifics and tailwater conditions.
- Outlet structures shall provide uniform redistribution or spreading of the flow without excessive separation and turbulence.
- Energy dissipaters are a required component of the *iSWM* Construction Plan.

Recommended Energy Dissipaters for outlet protection include the following:

- Riprap apron
- Riprap outlet basins
- Baffled outlets
- Grade Control Structures

The reader is referred to *Section 4.0 of the Hydraulics Technical Manual* and the Federal Highway Administration Hydraulic Engineering Circular No. 14 entitled, Hydraulic Design of Energy Dissipaters for Culverts and Channels, for the design procedures of other energy dissipaters.

Additional design guidance is located in *Section 4.0 of the Hydraulics Technical Manual.*

Local Provisions:

Channel Transitions, Energy Dissipation Structures, or Small Dams

A backwater analysis is required by the City of Azle, either hand computed or HEC-RAS, to determine accurate tailwater elevation and velocities, headlosses, headwater elevations, velocities and floodplains affected by the proposed transition into and out of 1) An improved channel, 2) Any on-stream energy dissipating structures, and 3) Small dams (less than 6 feet). If the current effective FEMA model for the stream is a HEC-2 model, the engineer has the option to either use that model, or convert to HEC-RAS for analysis of proposed conditions. For larger dams, a hydrologic routing will be required, as well as hydraulic analysis, to determine impacts of the proposed structure on existing

floodplains and adjacent properties.

Examples of Open Channel Transition Structures
See drawings in Appendix C - Miscellaneous Details and Specifications for Harris County Flood Control District Straight Drop Structure, Bureau of Reclamation Baffled Chute (Basin IX) and Gabion Drop Structure. The computer program associated with FHWA Hydraulic Engineering Circular No. 14 is "HY8Energy" dated May 2000. This program provides guidance in the selection and sizing of a broad range of energy dissipaters including some of those listed in Section 4 of the iSWM Hydraulics Technical Manual.

14.3.7 Easements, Plats, and Maintenance Agreements

Easements

Easements are required for all drainage systems that convey stormwater runoff across a development and must include sufficient area for operation and maintenance of the drainage system. Types of easements to be used include:

- Drainage easements - are required for both on-site and off-site public storm drains and for improved channels designed according to current municipality standards.
- Floodplain easements - shall be provided on-site along drainageways that are in a Special Flood Hazard Area as designated on the effective FEMA FIRM maps. No construction shall be allowed within a floodplain easement without the written approval of the municipality.
- Temporary drainage easements are required off-site for temporary channels when future off-site development is anticipated to be enclosed underground or follows an altered alignment. Temporary drainage easements will not be maintained by the municipality and will not terminate until permanent drainage improvements meeting municipality standards are installed and accepted. Temporary drainage easements will require written approval from the municipality.
- Drainage and utility easements can be combined for underground storm drains and channels, subject to adequate easement width as approved by the municipality.
- Drainage easements shall include adequate width for access and maintenance beyond the top of bank for improved channels.
- Retaining walls are not permitted within or adjacent to a drainage easement in a residential area in order to reduce the easement width. Retaining walls adjacent to the channel are allowed in non-residential areas only if the property owner provides an agreement for private maintenance.
- The minimum finished floor elevation for structures adjacent to a Special Flood Hazard Area shall be a minimum of one (1) foot above the fully-developed flood mitigation stormwater surface elevation or two (2) feet above the effective FEMA base flood elevation.
- Improved channels shall have drainage easements dedicated to meet the requirements of the width of the channel, the one-foot freeboard, any perimeter fencing, and any underground tie-backs or anchors.
- Easements for detention ponds and permanent control BMPs shall be negotiated between the municipality and the property owner.
- The entire reach or each section of any drainage facility must be readily accessible to maintenance equipment. Additional easement(s) shall be required at the access point(s) and the access points shall be appropriately designed to restrict access by the public (including motorcycles).

Minimum easement width requirements for storm drain pipe are shown in Table 3.14 and shall be as follows:

- The outside face of the proposed storm drain line shall be placed five (5) feet off either edge of the storm drain easement. The proposed centerline of overflow swales shall normally coincide with the centerline of the easement.
- For pipe sizes up to 54", a minimum of five (5) additional feet shall be dedicated when shared with utilities.
- Box culvert minimum easement width shall be determined using Table 3.14 based on an equivalent box culvert width to pipe diameter.
- For parallel storm drain systems with a combined width greater than 8 feet the minimum easement shall be equal to the width of the parallel storm drain system plus twenty (20) additional feet.
- Drainage easements will generally extend at least twenty-five (25) feet past an outfall headwall to provide an area for maintenance operations. Drainage easements along a required outfall channel or ditch shall be provided until the flowline reaches an acceptable outfall. The minimum storm drain shall not be on property line, except where a variance has been granted.

Table 14.3.14 Closed Conduit Easements

Pipe Size	Minimum Easement Width Required
39" and under	15 Feet
42" through 54"	20 Feet
60" through 66"	25 Feet
72" through 102"	30 Feet

Local Provisions:

Easements for Open Channels and Detention Ponds:

- **Drainage easements** shall be required for both on-site and off-site public stormwater drainage improvements, including standard engineered channels, storm drain systems, detention and retention facilities and other stormwater controls. (Public Water). Drainage easements shall include a five-foot (5') margin on both sides beyond actual top of bank for improved earthen channels. Retaining walls are not permitted within or adjacent to a drainage easement in a residential area in order to reduce the easement width. Retaining walls adjacent to the channel are allowed in non-residential areas only if the property owner provides an agreement for private maintenance.
- **Floodplain easements** shall be provided on sites along natural or improved earthen drainageways (other than standard engineered channels); to encompass the ultimate developed 100-year floodplain plus a 10' buffer on either side. The buffer shall be part of the floodplain easement itself and not a separate easement. Floodplain easements are not routinely maintained by the City.
- **Natural creeks** shall have a dedicated floodplain easement containing the inundation area of a 100 year frequency storm based on ultimate developed conditions, plus a ten-foot buffer horizontally adjacent to the inundation area. The minimum finished floor elevation for lots impacted by natural creeks shall be a minimum of two (2) feet above the 100 year ultimate developed water surface elevation. In addition, a riparian area along the creek may be placed in a drainage easement for perpetual, limited maintenance by the City of Azle, subject to the approval of the City of Azle and an agreement to preserve natural conditions and habitat within the riparian area.
- **Concrete Lined Channels and Gabion Lined Channels** shall have drainage easements dedicated to meet the requirements of the width of the channel, the one-foot freeboard, and the fence, if required by Storm Water Manager.
- **Private drainage easements**, not dedicated to the City, may be required for private stormwater drainage improvements serving multiple lots or for stormwater controls on a property. (No Public Water)
- **Access easements** shall be provided for access to public stormwater drainage improvements where necessary for maintenance.
- **Dam easements** shall be provided, to encompass any proposed dams (including any dams

already existing) and spillway structures. The 100-year water surface of any impounded lake shall be covered by a floodplain easement as described above. Dams and spillways shall comply with applicable City policy and state regulations.

- No construction shall be allowed within a floodplain easement without the written approval (floodplain permit) of the City of Azle, and then only after detailed engineering plans and studies show that no flooding will result, and that no obstruction to the natural flow of water will result.
- In certain circumstances where detention is in place or a master drainage plan has been adopted, a development may plan to receive less than ultimate developed flow conditions from upstream with the approval of the Storm Water Manager.
- Any parallel utility easements must be separate and outside of drainage easements for channels. Drainage and utility easements may be combined for underground storm drains, subject to the easement width requirements provided in this section and Section 3.3.
- Easements for stormwater controls including detention basins, sediment traps and retention ponds, shall be negotiated between the City and the Property Owner, but will normally include essential access to all embankment areas and inlet and outlet controls.
- The entire reach or each section of any drainage facility must be readily accessible to maintenance equipment. Additional easement(s) shall be required at the access point(s) and the access points shall be appropriately designed to restrict access by the public (including motorcycles).
- Drainage easements for structural overflows, swales, or berms shall be of sufficient width to encompass the structure or graded area.

City of Azle Easement Requirements for Closed Conduit Systems

- Box culverts shall have an easement width equal to the width of the box plus twenty (20) additional feet. The edge of the box should be located five (5) feet from either edge of the easement.
- Drainage easements shall encompass the entire width of an overflow flume plus five feet on each side. For an easement containing both a concrete flume and a storm drain, the wider of the two easement criteria shall control.
- Alternatively, a drainage right-of way or HOA lot (not part of any adjacent lot) may be dedicated for the width of the flume provided that an additional easement is dedicated for any storm drain pipe to meet the total width requirements specified above.

Plats

All platting shall follow established development standards established by the local municipality. Plats shall include pertinent drainage information that will be filed with the plat. Elements to be included on the plat include:

- All public and private drainage easements not recorded by separate instrument
- Easements to be recorded by separate instrument shall be documented on the plat
- All floodplain easements
- Legal disclosure for drainage provisions upon sale or transfer of property
- Documentation of maintenance responsibilities and agreements including transfer of responsibility upon sale of the property

Local Provisions: NONE

Maintenance Agreements

All drainage improvements constructed within a development and any existing or natural drainage systems to remain in use shall require a maintenance agreement that identifies responsible parties for maintenance. Both private and public maintenance responsibility shall be negotiated between the municipality and the owner and documented in the agreement. The maintenance agreement shall be written such that it remains in force upon sale of transfer of the property.

Local Provisions:

City Maintenance

The City of Azle will provide for perpetual maintenance, in accordance with adopted city maintenance standards, of all public drainage facilities located within dedicated easements and constructed to the City of Azle standards. In addition, limited perpetual maintenance may be provided by the City of Azle for riparian areas preserved in their natural state, subject to the approval of the City of Azle. Access shall be provided and dedicated by the developer to all public stormwater facilities in developments for maintenance and inspection by the City of Azle. City of Azle requires maintenance agreements only for private facilities.

Private Maintenance

- Private drainage facilities include those drainage improvements which are located on private property and which handle only private water.
- Private drainage facilities may also include detention or retention ponds, dams, and other stormwater controls which collect public water, as well as drainageways not constructed to City standards but which convey public water. Such facilities must be designed in accordance with sound engineering practices and reviewed and inspected by the City.
- An agreement for perpetual maintenance of private drainage facilities serving public water shall be executed with the City prior to acceptance of the final plat. This agreement shall run with the land and can be tied to commercial property or to an owner's association, but not to individual residential lots.
- Access shall be provided by the developer/owner to all private drainage facilities where there may be a public safety concern for inspection by the City of Azle.
- Also see Section 5.1.3.

14.3.8 Stormwater Control Selection

14.3.8.1 Control Screening Process

Outlined below is a screening process for structural stormwater controls that can effectively treat the water quality volume, as well as provide water quantity control. This process is intended to assist the site designer and design engineer in the selection of the most appropriate structural controls for a development site and to provide guidance on factors to consider in their location. This information is also contained in the iSWM Technical Manual – Site Development Controls section.

The following four criteria shall be evaluated in order to select the appropriate structural control(s) or group of controls for a development:

- Stormwater treatment suitability
- Water quality performance
- Site applicability
- Implementation considerations

In addition, the following factors shall be considered for a given site and any specific design criteria or restrictions need to be evaluated:

- Physiographic factors
- Soils
- Special watershed or stream considerations

Finally, environmental regulations shall be considered as they may influence the location of a structural control on site or may require a permit.

The following steps provide a selection process for comparing and evaluating various structural stormwater controls using a screening matrix and a list of location and permitting factors. These tools are provided to assist the design engineer in selecting the subset of structural controls that will meet the stormwater management and design objectives for a development site or project.

Step 1 Overall Applicability

The following are the details of the various screening categories and individual characteristics used to evaluate the structural controls.

Table 14.3.15 - Stormwater Management Suitability

The first category in the matrix examines the capability of each structural control option to provide water quality treatment, downstream streambank protection, and flood control. A blank entry means that the structural control cannot or is not typically used to meet an *integrated* Focus Area. This does not necessarily mean that it should be eliminated from consideration, but rather it is a reminder that more than one structural control may be needed at a site (e.g., a bioretention area used in conjunction with dry detention storage).

Ability to treat the Water Quality Volume (WQ_v): This indicates whether a structural control provides treatment of the water quality volume (WQ_v). The presence of "P" or "S" indicates whether the control is a Primary or Secondary control, respectively, for meeting the TSS reduction goal.

Ability to provide Streambank Protection (SP_v): This indicates whether the structural control can be used to provide the extended detention of the streambank protection volume (SP_v). The presence of a "P" indicates that the structural control can be used to meet SP_v requirements. An "S" indicates that the structural control may be sized to provide streambank protection in certain situations, for instance on small sites.

Ability to provide Flood Control (Q_f): This indicates whether a structural control can be used to meet the flood control criteria. The presence of a "P" indicates that the structural control can be used to provide peak reduction of the flood mitigation storm event.

Table 14.3.16 - Relative Water Quality Performance

The second category of the matrix provides an overview of the pollutant removal performance for each structural control option when designed, constructed, and maintained according to the criteria and specifications in this manual.

Ability to provide TSS and Sediment Removal: This column indicates the capability of a structural control to remove sediment in runoff. All of the Primary structural controls are presumed to remove 70% to 80% of the average annual TSS load in typical urban post-development runoff (and a proportional removal of other pollutants).

Ability to provide Nutrient Treatment: This column indicates the capability of a structural control to remove the nutrients nitrogen and phosphorus in runoff, which may be of particular concern with certain downstream receiving waters.

Ability to provide Bacteria Removal: This column indicates the capability of a structural control to remove bacteria in runoff. This capability may be of particular concern when meeting regulatory water quality criteria under the Total Maximum Daily Load (TMDL) program.

Ability to accept Hotspot Runoff: This last column indicates the capability of a structural control to treat runoff from designated hotspots. Hotspots are land uses or activities that produce higher concentrations of trace metals, hydrocarbons, or other priority pollutants. Examples of hotspots might include: gas stations, convenience stores, marinas, public works storage areas, garbage transfer facilities, material storage sites, vehicle service and maintenance areas, commercial nurseries, vehicle washing/steam cleaning, landfills, construction sites, industrial sites, industrial rooftops, and auto salvage or recycling facilities. A check mark indicates that the structural control may be used on hotspot site. However, it may have specific design restrictions. Please see the specific design criteria of the structural control for more details in the *Site Development Controls Technical Manual*.

Local jurisdictions may have other site uses that they designate as hotspots. Therefore, their criteria should be checked as well.

Table 14.3.17 - Site Applicability

The third category of the matrix provides an overview of the specific site conditions or criteria that must be met for a particular structural control to be suitable. In some cases, these values are recommended values or limits and can be exceeded or reduced with proper design or depending on specific circumstances. Please see the specific criteria section of the structural control for more details.

Drainage Area: This column indicates the approximate minimum or maximum drainage area considered suitable for the structural control practice. If the drainage area present at a site is slightly greater than the maximum allowable drainage area for a practice, some leeway can be permitted if more than one practice can be installed. The minimum drainage areas indicated for ponds and wetlands should not be considered inflexible limits and may be increased or decreased depending on water availability (baseflow or groundwater), the mechanisms employed to prevent outlet clogging, or design variations used to maintain a permanent pool (e.g., liners).

Space Required (Space Consumed): This comparative index expresses how much space a structural control typically consumes at a site in terms of the approximate area required as a percentage of the impervious area draining to the control.

Slope: This column evaluates the effect of slope on the structural control practice. Specifically, the slope restrictions refer to how flat the area where the facility is installed must be and/or how steep the contributing drainage area or flow length can be.

Minimum Head: This column provides an estimate of the minimum elevation difference needed at a site (from the inflow to the outflow) to allow for gravity operation within the structural control.

Water Table: This column indicates the minimum depth to the seasonally high water table from the bottom or floor of a structural control.

Table 14.3.18 - Implementation Considerations

The fourth category in the matrix provides additional considerations for the applicability of each structural control option.

Residential Subdivision Use: This column identifies whether or not a structural control is suitable for typical residential subdivision development (not including high-density or ultra-urban areas).

Ultra-Urban: This column identifies those structural controls appropriate for use in very high-density (ultra-urban) areas, or areas where space is a premium.

Construction Cost: The structural controls are ranked according to their relative construction cost per impervious acre treated, as determined from cost surveys.

Maintenance: This column assesses the relative maintenance effort needed for a structural stormwater control, in terms of three criteria: frequency of scheduled maintenance, chronic maintenance problems (such as clogging), and reported failure rates. It should be noted that **all structural controls** require routine inspection and maintenance.

Local Provisions: The Site Development Controls iSWM Technical Manual contains an exhaustive discussion and detailed examples of stormwater controls that can be implemented in land development to meet the goals of protecting water quality, minimizing streambank erosion, and reducing flood volumes. It is an excellent planning and design resource document and has valuable design examples that the City of Azle encourages local developers to consider in their site planning. Although it is primarily oriented toward water quality issues, these stormwater controls bring additional and valuable benefits for flood control and streambank protection. Many of the listed stormwater control features and techniques enhance the aesthetics and value of land developments, as well as providing a drainage function.

Since the City of Azle is currently emphasizing the streambank protection and flood control components of the *integrated* stormwater management approach, the Stormwater ControlSection (Section 3.8) of applicable features that may be implemented in local developments and redevelopments. The City of Azle does not mandate the use of any of these stormwater controls, but recognizes the inherent values of their application in overall stormwater management.

Therefore, the City of Azle adopts for design guidance and technical reference sections of the iSWM Technical Manual. There are, however, no City of Azle requirements for achieving Stormwater Quality or Channel Protection volumes.

Table 14.3.15 Stormwater Treatment Suitability

Category	Category	Category			
Bioretention Areas	Bioretention Areas	Bioretention Areas	Bioretention Areas	Bioretention Areas	Bioretention Areas
Channels	Channels	Channels	Channels	Channels	Channels
Chemical Treatment	Chemical Treatment	Chemical Treatment	Chemical Treatment	Chemical Treatment	Chemical Treatment
Conveyance System Components	Conveyance System Components	Conveyance System Components	Conveyance System Components	Conveyance System Components	Conveyance System Components
Detention	Detention	Detention	Detention	Detention	Detention
Filtration	Filtration	Filtration	Filtration	Filtration	Filtration
Hydrodynamic Devices	Hydrodynamic Devices	Hydrodynamic Devices	Hydrodynamic Devices	Hydrodynamic Devices	Hydrodynamic Devices
Infiltration	Infiltration	Infiltration	Infiltration	Infiltration	Infiltration
Ponds	Ponds	Ponds	Ponds	Ponds	Ponds
Porous Surfaces	Porous Surfaces	Porous Surfaces	Porous Surfaces	Porous Surfaces	Porous Surfaces
Proprietary Systems	Proprietary Systems	Proprietary Systems	Proprietary Systems	Proprietary Systems	Proprietary Systems
Re-Use	Re-Use	Re-Use	Re-Use	Re-Use	Re-Use
Wetlands	Wetlands	Wetlands	Wetlands	Wetlands	Wetlands

P =Primary Control: Able to meet design criterion if properly designed, constructed and maintained.
S = Secondary Control: May partially meet design criteria. May be a Primary Control but designated as a Secondary due to other considerations. For Water Quality Protection, recommended for limited use in approved community-designated areas.
- =Not typically used or able to meet design criterion.
[1] = The application and performance of proprietary commercial devices and systems must be provided by the manufacturer and should be verified by independent third-party sources and data if used as a primary control.

Table 14.3.16 Water Quality Performance

Category	Category	Category			
Bioretention Areas	Bioretention Areas	Bioretention Areas	Bioretention Areas	Bioretentio n Areas	Bioretenti on Areas
Channels	Channels	Channels	Channels	Channels	Channels
Chemical Treatment	Chemical Treatment	Chemical Treatment	Chemical Treatment	Chemical Treatment	Chemical Treatment
Conveyance System Components	Conveyance System Components	Conveyance System Components	Conveyance System Components	Conveyan ce System Componen ts	Conveyan ce System Compone nts
Detention	Detention	Detention	Detention	Detention	Detention
Filtration	Filtration	Filtration	Filtration	Filtration	Filtration
Hydrodynamic Devices	Hydrodynamic Devices	Hydrodynamic Devices	Hydrodynamic Devices	Hydrodyna mic Devices	Hydrodyn amic Devices
Infiltration	Infiltration	Infiltration	Infiltration	Infiltration	Infiltration
Ponds	Ponds	Ponds	Ponds	Ponds	Ponds
Porous Surfaces	Porous Surfaces	Porous Surfaces	Porous Surfaces	Porous Surfaces	Porous Surfaces
Proprietary Systems	Proprietary Systems	Proprietary Systems	Proprietary Systems	Proprietary Systems	Proprietar y Systems
Re-Use	Re-Use	Re-Use	Re-Use	Re-Use	Re-Use
Wetlands	Wetlands	Wetlands	Wetlands	Wetlands	Wetlands

✓ = Meets suitability criteria
- = Not typically used or able to meet design criterion.
[1] = The application and performance of proprietary commercial devices and systems must be provided by the manufacturer and should be verified by independent third-party sources and data if used as a primary control.
[2] = Porous surfaces provide water quality benefits by reducing the effective impervious area.

Table 14.3.17 Site Applicability

Category	Category	Category				
Bioretention Areas	Bioretention Areas	Bioretention Areas	Bioretention Areas	Bioretention Areas	Bioretention Areas	Bioretention Areas
Channels	Channels	Channels	Channels	Channels	Channels	Channels
Chemical Treatment	Chemical Treatment	Chemical Treatment	Chemical Treatment	Chemical Treatment	Chemical Treatment	Chemical Treatment
Conveyance System Components	Conveyance System Components	Conveyance System Components	Conveyance System Components	Conveyance System Components	Conveyance System Components	Conveyance System Components
Detention	Detention	Detention	Detention	Detention	Detention	Detention
Filtration	Filtration	Filtration	Filtration	Filtration	Filtration	Filtration
Hydrodynamic Devices	Hydrodynamic Devices	Hydrodynamic Devices	Hydrodynamic Devices	Hydrodynamic Devices	Hydrodynamic Devices	Hydrodynamic Devices
Infiltration	Infiltration	Infiltration	Infiltration	Infiltration	Infiltration	Infiltration
Ponds	Ponds	Ponds	Ponds	Ponds	Ponds	Ponds
Porous Surfaces	Porous Surfaces	Porous Surfaces	Porous Surfaces	Porous Surfaces	Porous Surfaces	Porous Surfaces
Proprietary Systems	Proprietary Systems	Proprietary Systems	Proprietary Systems	Proprietary Systems	Proprietary Systems	Proprietary Systems
Re-Use	Re-Use	Re-Use	Re-Use	Re-Use	Re-Use	Re-Use
Wetlands	Wetlands	Wetlands	Wetlands	Wetlands	Wetlands	Wetlands

- = Not typically used or able to meet design criterion.
1 = The application and performance of proprietary commercial devices and systems must be provided by the manufacturer and should be verified by independent third-party sources and data if used as a primary control.
2 = Porous surfaces provide water quality benefits by reducing the effective impervious area.
3 = Drainage area can be larger in some instances

Table 14.3.18 Implementation Considerations

Category	Category	Category			
Bioretention Areas	Bioretention Areas	Bioretention Areas	Bioretention Areas	Bioretention Areas	Bioretention Areas
Channels	Channels	Channels	Channels	Channels	Channels
Chemical Treatment	Chemical Treatment	Chemical Treatment	Chemical Treatment	Chemical Treatment	Chemical Treatment
Conveyance System Components	Conveyance System Components	Conveyance System Components	Conveyance System Components	Conveyance System Components	Conveyance System Components
Detention	Detention	Detention	Detention	Detention	Detention
Filtration	Filtration	Filtration	Filtration	Filtration	Filtration
Hydrodynamic Devices	Hydrodynamic Devices	Hydrodynamic Devices	Hydrodynamic Devices	Hydrodynamic Devices	Hydrodynamic Devices
Infiltration	Infiltration	Infiltration	Infiltration	Infiltration	Infiltration
Ponds	Ponds	Ponds	Ponds	Ponds	Ponds
Porous Surfaces	Porous Surfaces	Porous Surfaces	Porous Surfaces	Porous Surfaces	Porous Surfaces
Proprietary Systems	Proprietary Systems	Proprietary Systems	Proprietary Systems	Proprietary Systems	Proprietary Systems
Re-Use	Re-Use	Re-Use	Re-Use	Re-Use	Re-Use
Wetlands	Wetlands	Wetlands	Wetlands	Wetlands	Wetlands

✓ = Meets suitability criteria
- = Not typically used or able to meet design criterion.
1 = The application and performance of proprietary commercial devices and systems must be provided by the manufacturer and should be verified by independent third-party sources and data if used as a primary control.

Step 2 Specific Criteria

The last three categories in the Structural Control Screening matrix provide an overview of various specific design criteria and specifications, or exclusions for a structural control that may be present due to a site's general physiographic character, soils, or location in a watershed with special water resources considerations.

Table 14.3.19 - Physiographic Factors

Three key factors to consider are low-relief, high-relief, and karst terrain. In the North Central Texas, low relief (very flat) areas are primarily located east of the Dallas metropolitan area. High relief (steep and hilly) areas are primarily located west of the Azle metropolitan area. Karst and major carbonaceous rock areas are limited to portions of Palo Pinto, Erath, Hood, Johnson, and Somervell counties. Special geotechnical testing requirements may be needed in karst areas. The local reviewing authority should be consulted to determine if a project is subject to terrain constraints.

- Low relief areas need special consideration because many structural controls require a hydraulic head to move stormwater runoff through the facility.
- High relief may limit the use of some structural controls that need flat or gently sloping areas to settle out sediment or to reduce velocities. In other cases, high relief may impact dam heights to the point that a structural control becomes infeasible.
- Karst terrain can limit the use of some structural controls as the infiltration of polluted waters directly into underground streams found in karst areas may be prohibited. In addition, ponding areas may not reliably hold water in karst areas.

Table 14.3.20 - Soils

The key evaluation factors are based on an initial investigation of the NRCS hydrologic soils groups at the site. Note that more detailed geotechnical tests are usually required for infiltration feasibility and during design to confirm permeability and other factors.

Table 14.3.21 - Special Watershed or Stream Considerations

The design of structural stormwater controls is fundamentally influenced by the nature of the downstream water body that will be receiving the stormwater discharge. In addition, the designer should consult with the appropriate review authority to determine if their development project is subject to additional structural control criteria as a result of an adopted local watershed plan or special provision.

In some cases, higher pollutant removal or environmental performance is needed to fully protect aquatic resources and/or human health and safety within a particular watershed or receiving water. Therefore, special design criteria for a particular structural control or the exclusion of one or more controls may need to be considered within these watersheds or areas. Examples of important watershed factors to consider include:

High Quality Streams (Streams with a watershed impervious cover less than approximately 15%). These streams may also possess high quality cool water or warm water aquatic resources or endangered species. The design objectives are to maintain habitat quality through the same techniques used for cold-water streams, with the exception that stream warming is not as severe of a design constraint. These streams may also be specially designated by local authorities.

Wellhead Protection: Areas that recharge existing public water supply wells present a unique management challenge. The key design constraint is to prevent possible groundwater contamination by preventing infiltration of hotspot runoff. At the same time, recharge of unpolluted stormwater is encouraged to maintain flow in streams and wells during dry weather.

Reservoir or Drinking Water Protection: Watersheds that deliver surface runoff to a public water supply reservoir or impoundment are a special concern. Depending on the available treatment, a greater level of pollutant removal may be necessary for the pollutants of concern, such as bacteria

pathogens, nutrients, sediment, or metals. One particular management concern for reservoirs is ensuring stormwater hotspots are adequately treated so they do not contaminate drinking water.

Local Provisions: NONE

Table 14.3.19 Physiographic Factors

Category	Category	Category		
Bioretention Areas	Bioretention Areas	Bioretention Areas	Bioretention Areas	Bioretention Areas
Channels	Channels	Channels	Channels	Channels
Chemical Treatment	Chemical Treatment	Chemical Treatment	Chemical Treatment	Chemical Treatment
Conveyance System Components	Conveyance System Components	Conveyance System Components	Conveyance System Components	Conveyance System Components
Detention	Detention	Detention	Detention	Detention
Filtration	Filtration	Filtration	Filtration	Filtration
Hydrodynamic Devices	Hydrodynamic Devices	Hydrodynamic Devices	Hydrodynamic Devices	Hydrodynamic Devices
Infiltration	Infiltration	Infiltration	Infiltration	Infiltration
Ponds	Ponds	Ponds	Ponds	Ponds
Porous Surfaces	Porous Surfaces	Porous Surfaces	Porous Surfaces	Porous Surfaces
Proprietary Systems	Proprietary Systems	Proprietary Systems	Proprietary Systems	Proprietary Systems
Re-Use	Re-Use	Re-Use	Re-Use	Re-Use
Wetlands	Wetlands	Wetlands	Wetlands	Wetlands
	Wetlands, Submerged Gravel			

[1] = The application and performance of proprietary commercial devices and systems must be provided by the manufacturer and should be verified by independent third-party sources and data if used as a primary control.

Table 14.3.20 Soils

Category	*integrated* Stormwater Controls	Soils
Bioretention Areas	Bioretention Areas	Clay or silty soils may require pretreatment
Channels	Enhanced Swales	
	Channels, Grass	
	Channels, Open	
Chemical Treatment	Alum Treatment System	
Conveyance System Components	Culverts	
	Energy Dissipation	
	Inlets/Street Gutters	
	Pipe Systems	
Detention	Detention, Dry	Underlying soils of hydrologic group "C" or "D" should be adequate to maintain a permanent pool. Most group "A" soils and some group "B" soils will require a pond liner.
	Detention, Extended Dry	
	Detention, Multi-purpose Areas	
	Detention, Underground	
Filtration	Filter Strips	
	Organic Filters	
	Planter Boxes	Type A or B
	Sand Filters, Surface/Perimeter	Clay or silty soils may require pretreatment
	Sand Filters, Underground	
Hydrodynamic Devices	Gravity (Oil-Grit) Separator	
Infiltration	Downspout Drywell	Infiltration rate > 0.5 inch/hr
	Infiltration Trenches	Infiltration rate > 0.5 inch/hr
	Soakage Trenches	Infiltration rate > 0.5 inch/hr
Ponds	Wet Pond	"A" soils may require pond liner "B" soils may require infiltration testing
	Wet ED Pond	
	Micropool ED Pond	
	Multiple Ponds	
Porous Surfaces	Green Roof	
	Modular Porous Paver Systems	Infiltration rate > 0.5 inch/hr
	Porous Concrete	
Proprietary Systems	Proprietary Systems [1]	
Re-Use	Rain Barrels	
Wetlands	Wetlands, Stormwater	"A" soils may require pond liner
	Wetlands, Submerged Gravel	

[1] = The application and performance of proprietary commercial devices and systems must be provided by the manufacturer and should be verified by independent third-party sources and data if used as a primary control.

Table 14.3.21 Special Watershed Considerations

Category	*integrated* Stormwater Controls	Special Watershed Considerations		
		High Quality Stream	Aquifer Protection	Reservoir Protection
Bioretention Areas	Bioretention Areas	Evaluate for stream warming	Needs to be designed with no exfiltration (ie. outflow to groundwater)	
Channels	Enhanced Swales		Hotspot runoff must be adequately treated	Hotspot runoff must be adequately treated
	Channels, Grass			
	Channels, Open			
Chemical Treatment	Alum Treatment System			
Conveyance System Components	Culverts			
	Energy Dissipation			
	Inlets/Street Gutters			
	Pipe Systems			
Detention	Detention, Dry			
	Detention, Extended Dry			
	Detention, Multi-purpose Areas			
	Detention, Underground			
Filtration	Filter Strips			
	Organic Filters			
	Planter Boxes			
	Sand Filters, Surface/Perimeter	Evaluate for stream warming	Needs to be designed with no exfiltration (ie. outflow to groundwater)	
	Sand Filters, Underground			
Hydrodynamic Devices	Gravity (Oil-Grit) Separator			
Infiltration	Downspout Drywell			
	Infiltration Trenches		Maintain safe distance from wells and water table. No hotspot runoff	Maintain safe distance from bedrock and water table. Pretreat runoff
	Soakage Trenches			
Ponds	Wet Pond	Evaluate for stream warming	May require liner if "A" soils are present Pretreat hotspots 2 to 4 ft separation distance from water table	
	Wet ED Pond			
	Micropool ED Pond			
	Multiple Ponds			
Porous Surfaces	Green Roof			
	Modular Porous Paver Systems			
	Porous Concrete			
Proprietary Systems	Proprietary Systems [1]			
Re-Use	Rain Barrels			
Wetlands	Wetlands, Stormwater	Evaluate for stream warming	May require liner if "A" soils are present Pretreat hotspots 2 to 4 ft separation distance from water table	
	Wetlands, Submerged Gravel			

[1] = The application and performance of proprietary commercial devices and systems must be provided by the manufacturer and should be verified by independent third-party sources and data if used as a primary control.

Step 3 Location and Permitting Considerations

In the last step, a site designer assesses the physical and environmental features at the site to determine the optimal location for the selected structural control or group of controls. Table 3.22 provides a condensed summary of current restrictions as they relate to common site features that may be regulated under local, state, or federal law. These restrictions fall into one of three general categories:

- Locating a structural control within an area when expressly prohibited by law
- Locating a structural control within an area that is strongly discouraged, and is only allowed on a case by case basis. Local, state, and/or federal permits shall be obtained, and the applicant will need to supply additional documentation to justify locating the stormwater control within the regulated area.
- Structural stormwater controls must be setback a fixed distance from a site feature.

This checklist is only intended as a general guide to location and permitting requirements as they relate to siting of stormwater structural controls. Consultation with the appropriate regulatory agency is the best strategy.

Local Provisions: NONE

Table 14.3.22 Location and Permitting Checklist

Site Feature	Location and Permitting Guidance
Jurisdictional Wetland (Waters of the U.S) U.S. Army Corps of Engineers Regulatory Permit	• Jurisdictional wetlands must be delineated prior to sitting structural control. • Use of natural wetlands for stormwater quality treatment is contrary to the goals of the Clean Water Act and should be avoided. • Stormwater should be treated prior to discharge into a natural wetland. • Structural controls may also be *restricted* in local buffer zones. Buffer zones may be utilized as a non-structural filter strip (i.e., accept sheet flow). • Should justify that no practical upland treatment alternatives exist. • Where practical, excess stormwater flows should be conveyed away from jurisdictional wetlands.
Stream Channel (Waters of the U.S) U.S. Army Corps of Engineers Section 404 Permit	• All Waters of the U.S. (streams, ponds, lakes, etc.) should be delineated prior to design. • Use of any Waters of the U.S. for stormwater quality treatment is contrary to the goals of the Clean Water Act and should be avoided. • Stormwater should be treated prior to discharge into Waters of the U.S. • In-stream ponds for stormwater quality treatment are highly discouraged. • Must justify that no practical upland treatment alternatives exist. • Temporary runoff storage preferred over permanent pools. • Implement measures that reduce downstream warming.

Table 14.3.22 Location and Permitting Checklist	
Site Feature	**Location and Permitting Guidance**
Texas Commission on Environmental Quality Groundwater Management Areas	• Conserve, preserve, protect, recharge, and prevent waste of groundwater resources through Groundwater Conservation Districts • Groundwater Conservation District pending for Middle Trinity. • Detailed mapping available from Texas Alliance of Groundwater Districts.
Texas Commission on Environmental Quality Surface Water Quality Standards	• Specific stream and reservoir buffer requirements. • May be imperviousness limitations • May be specific structural control requirements. • TCEQ provides water quality certification – in conjunction with 404 permit • Mitigation will be required for imparts to existing aquatic and terrestrial habitat.
100-year Floodplain Local Stormwater review Authority	• Grading and fill for structural control construction is generally discouraged within the 100-year floodplain, as delineated by FEMA flood insurance rate maps, FEMA flood boundary and floodway maps, or more stringent local floodplain maps. • Floodplain fill cannot raise the floodplain water surface elevation by more than limits set by the appropriate jurisdiction.
Stream Buffer Check with appropriate review authority whether stream buffers are required	• Consult local authority for stormwater policy. • Structural controls are discouraged in the streamside zone (within 25 feet or more of streambank, depending on the specific regulations).
Utilities Local Review Authority	• Call appropriate agency to locate existing utilities prior to design. • Note the location of proposed utilities to serve development. • Structural controls are discouraged within utility easements or rights of way for public or private utilities.
Roads TxDOT or DPW	• Consult TxDOT for any setback requirement from local roads. • Consult DOT for setbacks from State maintained roads. • Approval must also be obtained for any stormwater discharges to a local or state-owned conveyance channel.
Structures Local Review Authority	• Consult local review authority for structural control setbacks from structures. • Recommended setbacks for each structural control group are provided in the performance criteria in this manual.
Septic Drain fields Local Health Authority	• Consult local health authority. • Recommended setback is a minimum of 50 feet from drain field edge or spray area.
Water Wells Local Health Authority	• 100-foot setback for stormwater infiltration. • 50-foot setback for all other structural controls.

14.4.0 *integrated* Construction Criteria

The chapter lays out the criteria and methods to be employed during construction to limit erosion and the discharge of sediment and other pollutants from construction sites.

14.4.1 Applicability

Requirements for temporary controls during construction are applicable to the following projects:

- Land disturbing activity of one acre or more or
- Land disturbing activity of less than one acre, where the activity is part of a common plan of development that is one acre or larger.

A common plan of development refers to a construction activity that is completed in separate stages, separate phases, or in combination with other construction activities.

Local Provisions: City of Azle has established minimum guidelines for controlling construction runoff for all land disturbance activities, even where there is less than 1 acre of disturbed surface (See Figure 1.2).

Construction activities shall comply with the SWPPP requirements in the effective TPDES General permit relating to Stormwater Discharges from Construction Activities, of the Stormwater Pollution Control Ordinance and the appropriate federal (Environmental Protection Agency) and state (Texas Commission on Environmental Quality) regulations. When the ordinance and applicable regulations are in conflict, the most stringent requirements shall apply.

See Appendix D (Sediment and Erosion Control Guidelines for Small Sites).

14.4.2 Introduction

iSWM requires the use of temporary controls during construction to prevent or reduce the discharge of sediment and other pollutants from the construction site. The temporary controls are known as Best Management Practices (BMPs). BMPs may be activities, prohibitions, maintenance procedures, structural controls, operating procedures and other measures to prevent erosion and control the discharge of sediment and other pollutants.

Construction BMPs shall be considered when developing the Preliminary iSWM Plan and shall be coordinated with the Final iSWM Plans. Construction BMPs fall into three general categories: Erosion Control, Sediment Control, and Material and Waste Control. The first category prevents erosion, and the second catches soil from erosion that does occur. It is generally more effective and less expensive to prevent erosion than to treat turbid runoff. Material and waste controls are for other sources of stormwater pollutants on a construction site.

The following priorities shall be applied to the selection of construction BMPs:

- Retain native topsoil and natural vegetation in an undisturbed state by incorporating natural drainage features and buffer areas into the site design.
- Limit the area of disturbance and vehicle access to the site.
- Limit the extent of clearing operations, and phase construction operations to minimize the area disturbed at any one time.
- Stabilize disturbed areas as soon as possible (not at the end of construction), particularly in channels

and on cut/fill slopes.

- Minimize the disturbance of steep slopes during construction, and minimize slope length and steepness.
- Coordinate stream crossings, and minimize the construction of temporary stream crossings.
- Provide sediment controls, including but not limited to perimeter controls, where stormwater discharges will occur from disturbed areas.
- Prevent tracking of sediment off-site through the establishment of stabilized construction entrances and exits.
- Control sediment and other contaminants from dewatering activities.
- Control discharges of construction materials and wastes.

State Requirements

In addition to the municipality requirements outlined in this chapter, land disturbing activities must comply with the Texas Commission on Environmental Quality (TCEQ) requirements under General Permit Number TXR150000, commonly referred to as the "Construction General Permit." This permit contains requirements for a Stormwater Pollution Prevention Plan (SWP3), state and local notifications, and installation, maintenance, and inspection of best management practices on construction sites. The *Water Quality Technical Manual* contains guidance for preparing a SWP3. However, compliance with the Construction General Permit is beyond the scope of this iSWM Criteria Manual and is the sole responsibility of the construction site operator(s).

Local Provisions: NONE

14.4.3 Criteria for BMPs during Construction

The iSWM Construction Plan shall include, but shall not be limited to, the following:

- Topography;
- Limits of all areas to be disturbed by construction activity, including off-site staging areas, utility lines, batch plants, and spoil/borrow areas;
- Location and types of erosion control, sediment control, and material and waste control BMPs;
- Construction details and notes for erosion control, sediment control, and material and waste control BMPs; and
- Inspections and maintenance notes.

BMPs and notes shall be provided for all the elements listed in this section, unless site conditions render an element not applicable. BMPs shall be selected and designed according to the technical criteria in the *Construction Controls Technical Manual*. Site data gathered and analyzed in Step 2 of the *integrated* Development Process shall be the basis for selecting BMPs.

The minimum design storm for temporary BMPs is the 2-year, 24-hour duration storm event.

Plans for temporary BMPs shall be prepared by a Certified Professional in Erosion and Sediment Control (CPESC) or a licensed engineer or registered landscape architect in the State of Texas who has documented experience in hydrology and hydraulics and erosion and sediment control.

Local Provisions: City of Azle allows flexibility to use BMP's not listed in the Construction Controls Technical Manual with approval of the Storm Water Manager

Capacity calculations shall be included in the iSWM Construction Plan.

It is the responsibility of the engineer to design appropriate BMP's for each site. If the most appropriate BMP is not in the NCTCOG BMP Manual, the engineer shall submit calculations and references for design of the BMP to City of Azle.

14.4.3.1 Erosion Controls

Erosion control is first line of defense and the primary means of preventing stormwater pollution. They shall be designed to retain soil in place and to minimize the amount of sediment that has to be removed from stormwater runoff by other types of BMPs. Fact Sheets for different types of Erosion Control BMPs are in the iSWM Technical Manual.

Limits of Disturbance

On the iSWM Construction Plans, clearly show the limits of the area to be disturbed.

Design Criteria

- Minimize the disturbance of steep slopes.
- Constrain the disturbed area to the minimum necessary to construct the project.
- Include the contractor's staging area, borrow/spoil area, utilities and any other areas on or off site that will be disturbed in support of the construction activity.
- Specify construction fencing or similar protective measures to prevent disturbance of natural drainage features, trees, vegetative buffers and other existing features to be preserved.

Slope Protection

Slope protection shall be provided for disturbed or cut/fill slopes that are one vertical on three horizontal (3H:1V) or steeper, 50 feet in length or longer, or on highly erodible soils. Show the location and type of BMPs to on the plans.

Design Criteria

- Where feasible, add notes that prohibit disturbing the slope until final site grading.
- Where a stabilized discharge point is available, provide temporary berms or swales to direct stormwater away from the slope until the slope is stabilized.
- Check dams shall be used within swales that are cut down a slope.
- Temporary terraces, vegetated strips or equivalent linear controls shall be specified at regular intervals to break-up slopes longer than 50 feet until the slope is stabilized.
- Specify final stabilization measures to be initiated within 14 days of completing work on the slope.
- Hydromulch is prohibited for slope stabilization unless the slope is one vertical on five horizontal (5H:1V) or less.

Channel Protection

Show the location and type of BMPs used to prevent the erosion of channels, drainage ways, streambanks, and outfalls until permanent structures and final stabilization measures are installed.

Design Criteria

- Provide temporary energy dissipaters at discharge points.
- If final channel stabilization consists of vegetation, anchored erosion control blankets, turf reinforcement mats, or an equivalent BMP that is resistant to channel flow shall be installed until the

vegetation is established.

- If the BMPs include check dams, velocity dissipaters or other structures that extend into the channel, the BMPs shall be designed by a licensed engineer to function under the flow conditions produced by the design storm. The engineer shall verify that the BMPs will not divert flow or cause flooding of adjacent properties and structures.
- Specify final stabilization measures to be initiated within 14 days of completing work on the channel.

Temporary Stabilization

Temporary stabilization practices shall be specified for disturbed areas where work stops for 14 days or more.

Design Criteria

- Stabilization measures shall be appropriate for the time of year, site conditions, and estimated duration of use.
- Stabilization BMPs shall be provided for soil stockpiles.

Final Stabilization

Final stabilization practices shall be specified for disturbed areas that are not covered by buildings, pavement or other permanent structures upon completion of construction. Final stabilization measures shall be coordinated with the site's landscaping plan.

Design Criteria

- Final stabilization shall be specified to start within fourteen days of completing soil disturbing activities.
- If space is available, top soil shall be stockpiled during construction and distributed onto the surface of disturbed areas prior to final stabilization.
- If top soil has not been stockpiled, soil amendments (compost, fertilizer, etc.) shall be specified with the final stabilization measures.
- Final stabilization measures must provide a perennial vegetative cover with a uniform density of 70% of the native background vegetative cover or equivalent permanent measures (riprap, gabion, or geotextiles).
- Include notes requiring temporary BMPs be removed within 30 days of establishing final stabilization.

Local Provisions:

Temporary Stabilization

Portions of a site that have been disturbed but where no work will occur for more than 21 days shall be temporarily stabilized as soon as possible, and no later than 14 days, except when precluded by seasonal arid conditions or prolonged drought.

Temporary stabilization shall consist of providing a protective cover, without large bare areas, that is designed to reduce erosion on disturbed areas. Temporary stabilization may be achieved using the following BMP's: temporary seeding, soil retention blankets, fibrous mulches, hydro-mulches and other techniques that cover 100 percent of the disturbed areas until final stabilization can be achieved or until further construction activities take place.

Final Stabilization

Hydro-mulch will not be allowed in vegetated swales, channels or other drainage ways. BMPs may

remain in place during stabilization; however, BMPs shall be removed after stabilization is achieved. The plan for final stabilization shall be coordinated with the permanent BMPs in the SWPPP and with the landscaping plan, if applicable.

Notice of Termination (NOT)

A NOT must be filled in accordance with the TCEQ TPDES Greneral Permit TXR15000, usually within 30 days after final stabilization of operational control. All parties that submitted a NOI shall submit a NOT within 30 days after final stabilization is established. When the owner of a residential subdivision transfers ownership of individual lots to builders before final stabilization is achieved, the SWPPP shall include controls for each individual lot in lieu of final stabilization. These controls shall consist of stabilization of the right-of-way and placement of structural BMPs at the low point of each individual lot or equivalent measures to retain soil on each lot during construction. Additionally, the builder must submit a valid NOI before an NOT can be submitted by the owner.

14.4.3.2 Sediment Controls

Sediment control BMPs shall be designed to capture sediment on the site when preventing erosion is not feasible due to on-going construction activity. Sediment control BMPs and their locations shall be designed to change with the different phases of construction as site conditions and drainage patterns change. Sediment controls for the initial phase of construction shall be installed before any site disturbing activities begin. Fact Sheets for different types of Sediment Control BMPs are in *Section 3.0 of the Construction Controls Technical Manual*.

Sediment Barriers

Sediment barriers may be linear controls (silt fence, compost socks, sediment logs, wattles, etc.), check dams, berms, sediment basins, sediment traps, active treatment systems and other structural BMPs designed to capture sediment suspended in stormwater.

Design Criteria

- Sediment barriers shall be designed to treat the volume of runoff from the design storm.
- Sediment barriers are not required for areas of the site that are undisturbed.
- If linear controls are used as the only sediment barrier for a project, the linear control shall be provided at a rate of 100 linear feet per quarter-acre of disturbed area. A series of linear controls may be needed throughout the site and are not limited to the perimeter.
- Linear controls shall not be used across areas of concentrated flow, such as drainage ditches, swales and outfalls.
- A sediment basin shall be provided where stormwater runoff from 10 acres or more of disturbed area flows to a common drainage location, unless a basin is infeasible due to site conditions or public safety. The basin shall be designed for the volume of runoff from the total area contributing (on-site and off-site) to the common drainage location, not just the volume from the disturbed portion of the contributing area. Stormwater diversion BMPs may be used to divert stormwater from upslope areas away from and around the disturbed area to minimize the design volume of the sediment basin.
- Both existing topography and graded topography shall be evaluated when determining if 10 acres or more discharges to a common location.
- If a sediment basin is infeasible on a site of 10 acres or more, a series of smaller sediment traps and/or linear controls shall be provided throughout the site to provide an equivalent level of protection.
- Permanent detention and retention basins may be used as a sediment basin during construction if all sediment is removed upon completion of construction.

Perimeter Controls

A linear BMP shall be provided at all down slope boundaries of the construction activity and side slope boundaries where stormwater runoff may leave the site. Linear sediment barriers may be used to satisfy the requirement for perimeter controls.

Storm Drain Inlet Protection

Storm drain inlet protection shall not be used as a primary sediment control BMP unless all other primary controls are infeasible due to site configuration or the type of construction activity. Inlet protection is intended to be a last line of defense in the event of a temporary failure of other sediment controls.

Design Criteria

- Municipality approval is required before installing inlet protection on public streets.
- Inlet protection shall only be specified for low point inlets where positive overflow is provided.
- Drainage patterns shall be evaluated to ensure inlet protection will not divert flow or flood the roadway or adjacent properties and structures.

Construction Access Controls

BMPs shall be provided to prevent off-site vehicle tracking of soil and pollutants.

Design Criteria

- Limit site access to one route during construction, if possible; two routes for linear projects.
- Design the access point(s) to be at the upslope side of the construction site. Do not place the construction access at the lowest point on the construction site.
- Specify rock stabilization or an equivalent BMP for all access points.
- Include notes requiring soil tracked onto public roads be removed at a frequency that minimizes site impacts and prior to the next rain event, if feasible.
- Using water to wash sediment from streets is prohibited.

Dewatering Controls

Water pumped from foundations, vaults, trenches and other low areas shall be discharged through a BMP or treated to remove suspended soil and other pollutants before the water leaves the site. The plans shall include notes that prohibit discharging the water directly into flumes, storm drains, creeks or other drainage ways. Where state or local discharge permit requirements exist for the pollutant(s) suspected of being in the water, the plan shall include the discharge permit conditions.

Local Provisions: Special approval is required by City of Azle regarding location and design of any inlet controls. Where permitted, the operator will be expected to diligently monitor storm conditions and to remove them when there is a risk of flooding.

14.4.3.3 Material and Waste Controls

Notes shall be placed on the iSWM Construction Plan for the proper handling and storage of materials and wastes that can be transported by stormwater. At a minimum, notes shall be provided for the materials and wastes in Table 4.1. Additional notes and BMPs shall be provided if other potential pollutants are expected to be on-site. Construction details shall be provided when necessary to ensure proper installation of a material or waste BMP.

All material and waste sources shall be located a minimum of 50 feet away from inlets, swales, drainage ways, channels and waters of the U.S., if the site configuration provides sufficient space to do so. In no case shall material and waste sources be closer than 20 feet from inlets, swales, drainage ways, channels and waters of the U.S.

Table 14.4.1 Requirements for Materials and Wastes

Material or Waste Source	Requirements
Sanitary Facilities	Sanitary facilities shall be provided on the site, and their location shall be shown on the *i*SWM Construction Plan. The facilities shall be regularly serviced at the frequency recommended by the supplier for the number of people using the facility.
Trash and Debris	Show the location of trash and debris storage on the *i*SWM Construction Plan. Store all trash and debris in covered bins or other enclosures. Trash and debris shall be removed from the site at regular intervals. Containers shall not be allowed to overflow.
Chemicals and Hazardous Materials	The amount of chemicals and hazardous materials stored on-site shall be minimized and limited to the materials necessary for the current phase of construction. Chemicals and hazardous materials shall be stored in their original, manufacturer's containers inside of a shelter that prevents contact with rainfall and runoff. Hazardous material storage shall be in accordance with all Federal, state and local laws and regulations. Storage locations shall have appropriate placards and secondary containment equivalent to 110% of the largest container in storage. If an earthen pit or berm is used for secondary containment, it shall be lined with plastic. Containers shall be kept closed except when materials are added or removed. Materials shall be dispensed using drip pans or within a lined, bermed area or using other spill/overflow protection measures.
Fuel Tanks	On-site fuel tanks shall be provided with a secondary enclosure equivalent to 110% of the tank's volume. If the enclosure is an earthen pit or berm, the area shall be lined with plastic. Show the location of fuel tanks and their secondary containment on the iSWM Construction Plan.
Concrete Wash-out Water	An area shall be designated on the iSWM Construction Plan for concrete wash-out. A pit or bermed area, lined with plastic, or an equivalent containment measure shall be provided for concrete wash-out water. The containment shall be a minimum of 6 CF for every 10 CY of concrete placed plus a one foot freeboard. The discharge of wash-out water to drainage ways or storm drain infrastructure shall be prohibited.
Hyper-chlorinated Water from Water Line Disinfection	Hyper-chlorinated water shall not be discharged to the environment unless the chlorine concentration is reduced to 4 ppm or less by chemically treating to dechlorinate or by on-site retention until natural attenuation occurs. Natural attenuation may be aided by aeration. Water with measurable chlorine concentration of less than 4 ppm is prohibited from being discharged directly to surface water. It shall be discharged onto vegetation or through a conveyance system for further attenuation of the chlorine before it reaches surface water. Alternatively, permission from the sanitary sewer operator may be obtained to discharge directly to the sanitary sewer.
Vehicle/Equipment Wash Water	Vehicle and equipment washing is prohibited on the site unless a lined basin is provided to capture 100% of the wash water. The wash water may be allowed to evaporate or hauled-off for disposal.

Table 14.4.1 Requirements for Materials and Wastes	
Material or Waste Source	**Requirements**
Soil Stabilizers	Lime or other chemical stabilizers shall be limited to the amount that can be mixed and compacted by the end of each working day. Stabilizers shall be applied at rates that result in no runoff. Stabilization shall not occur immediately before and during rainfall events. Soil stabilizers stored on-site shall be considered a hazardous material and shall meet all the requirements for chemicals and hazardous materials.
Concrete Saw-cutting Water	Slurry from concrete cutting shall be vacuumed or otherwise recovered and not be allowed to discharge from the site. If the pavement to be cut is near a storm drain inlet, the inlet shall be protected by sandbags or equivalent temporary measures to prevent the slurry from entering the inlet.

Local Provisions: NONE

14.4.3.4 Installation, Inspection and Maintenance

The iSWM Construction Plan shall include details and notes that specify the proper installation, inspection and maintenance procedures for BMPs. The BMPs for the initial phase of construction must be implemented before starting any activities that result in soil disturbance, including land clearing. Notes shall indicate the sequence of BMP installation for subsequent phases of construction.

Notes on the iSWM Construction Plan shall indicate the frequency of inspections and the areas to be inspected. Inspections shall include:

- Inspecting erosion and sediment controls to ensure that they are operating correctly;
- Inspecting locations where vehicles enter or exit the site for evidence of off-site tracking;
- Inspecting material and waste controls to ensure they are effective; and
- Inspecting the perimeter of disturbed areas and discharge points for evidence of sediment or other pollutants that may have been discharged.

Erosion, sediment, and material and waste controls shall be repaired, replaced, modified and/or added if inspections reveal the controls were not installed correctly, are damaged, or are inadequate or ineffective in controlling their targeted pollutant.

Notes for maintenance of BMPs shall require the removal of sediment from BMPs when the sediment reaches half of the BMP's capacity or more frequently. Sediment discharged from the site shall be removed prior to the next rain event, where feasible, and in no case later than seven days after it is discovered. Upon completion of construction, sediment shall be removed from all storm drain infrastructure and permanent BMPs before the temporary BMPs are removed from the site.

Local Provisions: See Section 5.5.

14.5.0 Additional Local Requirements

14.5.1 Goals and Objectives of the City of Azle Stormwater Management Program

A proper understanding of the City's adopted goals, and policies for stormwater management is essential for the proper application of this Manual.

14.5.1.1 Program Goals

The City's primary goal is to manage stormwater so that things don't get worse as new areas are developed - while making improvements in the areas of the city that are already developed.
We can accomplish this goal by:

1. Developing detailed watershed plans that promote orderly growth and result in an integrated system of public and private stormwater infrastructure
2. Adopting development policies and standards that prevent flooding, preserve streams and channels, and minimize water pollution without arresting either new or infill development
3. Fully complying with regulatory permit requirements
4. Operating the stormwater system in a more efficient and effective manner
5. Informing the public about stormwater issues in the community
6. Securing funding that is adequate for meeting these needs and is recognized by the public as fair and equitable

14.5.1.2 Planning and Design Objectives

1. Establish and implement drainage policy and criteria so that new development does not increase flooding problems, cause erosion or pollute downstream water bodies.
2. Facilitate the development of comprehensive watershed planning that promotes orderly growth and results in an integrated system of public and private stormwater infrastructure.
3. Minimize flood risks to citizens and properties, and stabilize or decrease streambank and channel erosion on creeks, channels, and streams.
4. Improve stormwater quality in creeks, rivers, and other water bodies, remove pollutants, enhance the environment and mimic the natural drainage system, to the extent practicable, in conformance with the Texas Pollutant Discharge Elimination System (TPDES) permit requirements.
5. Support multi-use functions of stormwater facilities for trails, green space, parks, greenways or corridors, stormwater quality treatment, and other recreational and natural features, provided they are compatible with the primary functions of the stormwater facility.
6. Encourage a more standardized, integrated land development process.

14.5.1.3 Design Guidelines

1. All development within the City of Azle City Limits or its Extra-territorial Jurisdiction (ETJ) shall include planning, design, and construction of storm drainage systems in accordance with this Stormwater Management Design Manual, Plan Commission Rules and Regulations, and Policy for the Installation of Community Facilities. Please see definition of development and project size

limitations for specific design requirements under “Abbreviations and Definitions” in the Foreward.

2. Conceptual, Preliminary and Final Drainage Studies and Plans shall be required for all proposed developments within the City of Azle City limits or its ETJ, in conformance with this Stormwater Management Design Manual, Plan Commission Rules and Regulations, and Policy for the Installation of Community Facilities. The checklists for each stage of this three-tier process are included in Appendix A – City of Azle Detailed Checklists.
3. All drainage related plans and studies shall be prepared and sealed by a Licensed Professional Engineer with a valid license from the State of Texas. The engineer shall attest that the design was conducted in accordance with this Stormwater Management Design Manual.
4. All drainage studies and design plans shall be formulated and based upon ultimate, fully developed watershed or drainage area runoff conditions. The rainfall frequency criteria for stormwater facilities, as enumerated within this Stormwater Management Design Manual, shall be utilized for all drainage studies and design plans.
5. Stormwater must be carried to an "adequate or acceptable outfall". An adequate outfall is one that does not create or increase flooding or erosion conditions downstream and is in all cases subject to the approval of the Storm Water Manager.
6. Proposed stormwater discharge rates and velocities from a development shall not exceed the runoff from existing, pre-development conditions, unless a detailed study is prepared that demonstrates that no unacceptable adverse impacts will be created. Adverse impacts include: new or increased flooding of existing insurable (FEMA) structures, significant increases in flood elevations over existing roadways, unacceptable rises in FEMA base flood elevations, and new or increased stream bank erosion.
7. Stormwater runoff may be stored in detention and retention basins to mitigate potential downstream problems caused by a proposed development. Proposed detention or retention basins shall be analyzed both individually and as a part of the watershed system, to assure compatibility with one another and with the City’s overall Stormwater Management Master Plan for that watershed (if available). Storage of stormwater runoff, near to the points of rainfall occurrence, such as the use of parking lots, ball fields, property line swales, parks, road embankments, borrow pits and on-site ponds is desirable and encouraged.
8. Stream bank stabilization and protection features to reduce or prevent erosion and sedimentation for creeks, streams, and channels shall be required, as specified in this Manual.
9. All proposed developments within the City of Azle City Limits or Extra-territorial Jurisdiction (ETJ) shall comply with all local, county, state and federal regulations and all required permits or approvals shall be obtained by the developer.
10. The policy of the City of Azle is to avoid substantial or significant transfer of stormwater drainage runoff from one basin to another and to maintain historical drainage paths whenever possible.
11. City Maintenance - The City of Azle will provide for perpetual maintenance, in accordance with adopted city maintenance standards, of all public drainage facilities located within dedicated easements and constructed to the City of Azle standards. Access shall be provided and dedicated by the developer to all public stormwater facilities in developments for maintenance and inspection by the City of Azle.
12. Private Maintenance:
    - Private drainage facilities include those drainage improvements which are located on private property and which handle only private water.
    - Private drainage facilities may also include detention or retention ponds, dams, and other stormwater controls which collect public water, as well as drainageways not constructed to City standards but which convey public water. Such facilities must be designed in accordance with sound engineering practices and reviewed and inspected by the City.
    - An agreement for perpetual maintenance of private drainage facilities serving public water shall be executed with the City prior to acceptance of the final plat. This agreement

shall run with the land and can be tied to commercial property or to an owner's association, but not to individual residential lots.

- Access shall be provided by the developer/owner to all private drainage facilities where there may be a public safety concern for inspection by the City of Azle.

14.5.2 Hydrologic Method Criteria

14.5.2.1 Hydrograph Method Computation Sheet

Figure 14.5.1 presents a sample computation sheet for presentation of unit hydrograph method results. This form should be completed even if the computations are performed on an acceptable computer programs HEC-1 or HEC-HMS

BY: DATE: CK'D: DATE:	LOSS RATE METHOD STREAM ROUTING		COMPUTATION SHEET HYDROLOGY BY UNIT HYDROGRAPH METHOD								SHEET 1 OF 1 SUBWATERSHED MAJOR WATERSHED JOB/FILE NO.:
ANALYSIS POINT	SUBWATER-SHED AREA (AC)	WATERSHED AREA (AC)	UNIT HYDROGRAPH COEFFICIENTS				PEAK DISCHARGES (CFS)				COMMENTS
			SCS METHOD		SNYDER'S METHOD						
			C_N	Lag (HR)	C_p	T_p (HR)	Q1	Q5	Q10	Q100	
1	2	3	4	5	6	7	8	9	10	11	12
REMARKS, SKETCHES AND COMPUTATIONS											

Figure 14.5.1 –Computation Sheet – Hydrology by Unit Hydrograph Method

14.5.3 Hydraulic Design of Street and Closed Conduits

14.5.3.1 Stormwater Inlets Computation Sheets

Explanation of the Inlets in Sumps Computation Sheet

In order to facilitate the computations required in determining the various hydraulic properties for curb opening inlets Type CO-S and drop inlets Type D-S in sump use Computation Sheet Figure 5.2.

Column 1	Inlet number and designation.
Column 2	Slope of gutter in ft. per ft.
Column 3	Crown slope of pavement in ft. per ft. For parabolic crowns enter type of street section.
Column 4	Total gutter flow in c.f.s. For inlets other than the first inlet in a system, gutter flow is the sum of runoff from contributing area plus carry-over flow from inlet or inlets upstream.
Column 5	Depth of gutter flow in feet from the spread of water calculations in Figure 1.2 (iSWM Hydraulics Technical Manual), Section 1.2.4 or from direct solution of Manning's equation for triangular gutters.
Column 6	Depth of gutter depression in ft.
Column 7	Depth of water at inlet opening in ft. Column 5 plus Column 6.
Column 8	Capacity of curb opening inlet or drop inlet in c.f.s. per ft. of length of opening or perimeter around inlet from Figures 1.10, 1.12 or 1.14 in the iSWM Hydraulics Technical Manual or by direct solution.
Column 9	Assumed length of inlet opening or perimeter in feet.
Column 10	Capacity of inlet in c.f.s. Column 8 times Column 9.
Column 11	Carry-Over flow passing inlet (into overflow swale) in c.f.s. Column 4 minus Column 10.
Column 12	Percent of flow captured by inlet. Column 10 divided by Column 4 times 100.

BY:
DATE:
CK'D:
DATE:

COMPUTATION SHEET NO. IV-1
FOR DETERMINING CAPACITY OF
CURB OPENING INLETS AND DROP INLETS IN SUMPS

n = .016

SHEET __ OF __
STREET: _____
MAJOR WATERSHED: _____
JOB/FILE NO.: ____

INLET NO.	GUTTER SLOPE So FT./FT.	CROWN SLOPE OF PVM'T θo FT./FT.	GUTTER FLOW Qo C.F.S.	DEPTH OF GUTTER FLOW Yo FT.	DEPTH OF DEPRESSION a FT.	DEPTH OF FLOW AT OPENING Y FT.	CAPACITY OF INLET PER FOOT OF LENGTH Q/L C.F.S/FT.	LENGTH OF INLET OPENING L OR P FT.	CAPACITY OF INLET Q C.F.S.	CARRY-OVER INTO OVER FLOW C.F.S.	PERCENT Q100 CAPTURED BY INLET	NOTES
1	2	3	4	5	6	7	8	9	10	11	12	13

REMARKS, SKETCHES AND COMPUTATIONS

Figure 14.5.2– Computation Sheet for Curb Opening and Drop Inlets

Explanation of the Inlets on Grade with Gutter Depression (Type CO-D) Computation Sheet

In order to facilitate the computations required in determining the various hydraulic properties for Curb Opening Inlets Type CO-D on grade (depressed), Figure 5.4 Computation Sheet has been prepared.

Table Column Description:

Column 1 Design Point for Inlet

Column 2 Inlet number(s)

Column 3 Location of inlet by storm drain station number

Column 4 Drainage area designation for incremental area

Column 5 Drainage area size (acres)

Column 6 Runoff coefficient “c” provided in Table 5.1 located in Section 3.6.2 under the “Storm Drain Pipe Design” section

Column 7 Time of concentration (minutes)

Column 8 Longitudinal slope (ft/ft)

Column 9 Cross slope of the pavement (ft/ft)

Column 10 Cross slope of the gutter measured from the cross slope of the pavements. The cross slope is equal to the gutter depression (in) divided by the width of the depressed gutter (in).

Column 11 Depth of gutter flow "yo" in approach gutter from spread of water determinations in iSWM Figure 1.3 or from direct solution of Manning's equation for triangular gutters: $yo = 1.245\ Qo^{3/8}\ (n^{3/8}/So^{3/16})\ (1/z)^{3/8}$. When the crown is overtopped, a composite analysis will be required.

Column 12 Spread of flow is calculated using Figure 1.2 in the iSWM Hydraulics Technical Manual or from direct solution of Manning’s Equation

Column 13 Equivalent cross slope is computed by using Figure 1.3 and 1.4 in the iSWM Hydraulics Technical Manual to determine the ratio of flow in the depressed gutter section to the total flow

Column 14 Street crown section type (straight crown [“rooftop”] or parabolic)

Column 15 Manning’s roughness coefficient (n) for pavement values located in Section 3.6.2 under the “Storm Drain Pipe Design” section

Column 16 5-year rainfall intensity (in/hr), From Section 5.0 in the iSWM Hydrology Technical Manual Tarrant County Rainfall Table

Column 17 5-year runoff, Q=cAi (cfs)

Column 18 5-year carryover flow from upstream inlet (cfs)

Column 19 5-year total gutter flow (Column 16 + Column 17) (cfs)

Column 20 100-year rainfall intensity (in/hr), From Section 5.0 in the iSWM Hydrology Technical Manual Tarrant County Rainfall Table

Column 21 100-year runoff, Q=cAi (cfs)

Column 22 100-year carryover flow from upstream inlet (cfs)

Column 23 100-year total gutter flow (Column 20 + Column 21) (cfs)

Column 24 Total right-of-way capacity (normally 2.5” over top of curb) (cfs)

Column 25	This indicates the controlling storm for inlet spacing, depending on which criteria (5-year in street or 100-year in ROW) may be exceeded. This indicates whether the inlet is sized for the 5-year or 100-year flows
Column 26	Length required for total interception of the design storm determination in Figure 1.8 of the iSWM Hydraulics Technical Manual or by direct solution of Manning's Equation
Column 27	Actual length (L) in feet of the inlet which is to be provided (10', 15', or 20')
Column 28	Ratio of the length of inlet provided (L) to the length of the inlet required for 100% interception (L_T). Column 24 divided by Column 25.
Column 29	The efficiency of the provided inlet determined by Figure 1.9 in the iSWM Hydraulics Technical Manual.
Column 30	Discharge (Q_i) in cubic feet per second in which the inlet in question actually intercepts in the design storm. Column 18 multiplied by Column 27.
Column 31	Carry-over flow (q) is the amount of water which passes the inlet in a 5-year storm. A substantial portion of the 5-year flow should be picked up by the inlet. The carry-over flow should be accounted for in further downstream inlets.
Column 32	Carry-over flow (q) is the amount of water which passes the inlet in a 100-year storm. The carry-over flow should be accounted for in further downstream inlets and should be reflected in the inlet bypass flow (Column 17) in the Storm Drain Hydraulics Table (minor variances may occur due to travel time routing in the Hydraulics Table).

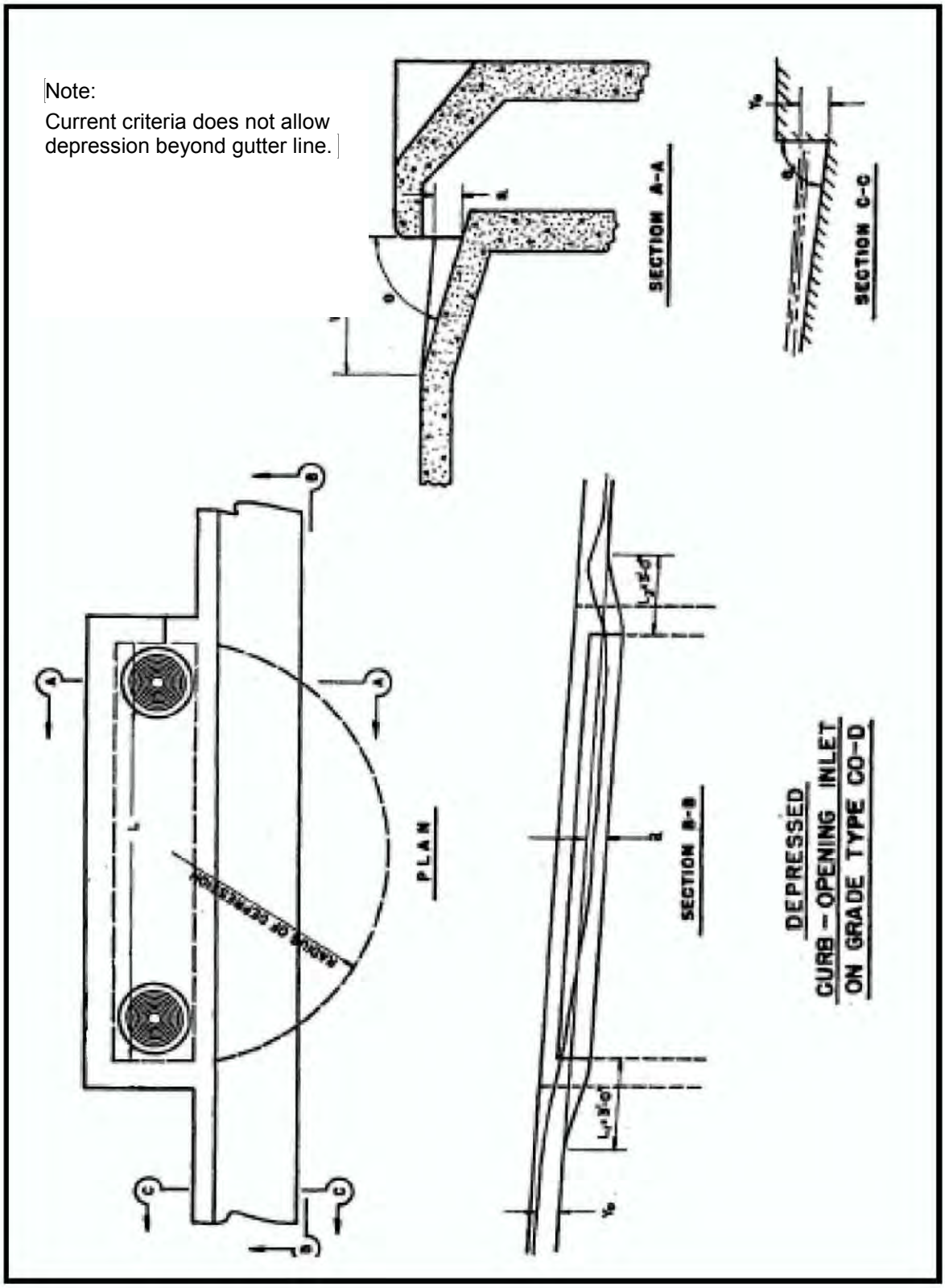

Figure 14.5.3 Inlets on Grade with Gutter Depression

COMPUTATION SHEET
FOR DETERMINING CAPACITY OF
CURB OPENING INLET ON GRADE (DEPRESSED)

Inlet			Drainage Area				Cross Slope of Pavement "Sx" (ft/ft)	Long Slope "S" (ft/ft)	Cross Slope of Gutter "S'x" (ft/ft)	Depth of Flow "Yo"* (ft)	Spread of Flow "T" (ft)	Equivalent Cross Slope "Se" (ft/ft)	Street Section (type)	Manning's coefficient pavement "n"	5-year Intensity (in/hr)	5-year Runoff (cfs)	5-year Carryover Flow (cfs)	5-year Total Gutter Q (cfs)	100-year Intensity (in/hr)	100-year Runoff (cfs)	100-year Carryover Flow (cfs)	Right-of-Way Capacity (cfs)	100-year Total Gutter Q (cfs)	Design Storm**	Length Required "L_T" (ft)	Actual Provided Length "L" (ft)	L/L_T	Efficiency "E"	Inlet Capacity "Qi" (cfs)	5-year Carryover Flow "q" (cfs)	100-year Carryover Flow "q" (cfs)	
Design Point	Inlet No.	Station	Area No.	Area (acres)	Runoff "c"	Conc. Time (min)																											COMMENTS
1	2	3	4	5	6	7	8	9	10	11	12	13	14	15	16	17	18	19	20	21	22	23	24	25	26	27	28	29	30	31	32	33

Notes: * Assumption of full curb in all conditions may lead to overestimation of inlet capacity.
** This is the controlling storm for inlet spacing, depending on which criteria (5-year in street or 100-year in ROW) may be exceeded)

Figure 14.5.4 Computation Sheet for On Grade Curb Inlet

14.5.3.2 Minor Head Losses at Structures

The following head losses at structures shall be determined for manholes, wye branches or bends in the design of closed conduits. See Figures 5.5 and 5.6 for details of each case. Minimum head loss used at any structure shall be 0.10 foot.

The basic equation for most cases, where there are both upstream and downstream velocity, takes the form as set forth below with the various conditions of the coefficient "Kj" shown in Table 5.3.

$h_j = (v_2^2/2g) - K_j(v_1^2/2g)$

h_j = Junction or structure head loss in feet.

v_l = Velocity in upstream pipe in fps

v_2 = Velocity in downstream pipe in fps

Kj = Junction or structure coefficient of loss.

In the case where the manhole is at the very beginning of a line or the line is laid with bends or on a curve, the equation becomes the fol1owing without any velocity of approach.

$$h_j = K_j \frac{v_2^2}{2g}$$

Table 14.5.1 Junction or Structure Coefficient of Loss

Case No.	Reference Figure	Description of Condition	Coefficient K_j
I	5.10	Inlet on Main Line	0.50
II	5.10	Inlet on Main Line with Branch Lateral	0.25
III	5.10	Manhole on Main Line with 45º Branch lateral	0.50
IV	5.10	Manhole on Main Line with 90º Branch Lateral	0.25
V	5.11	45º Wye Connection or cut-in	0.75
VI	5.11	Inlet or Manhole at Beginning of Line	1.25
VII	5.11	Conduit on Curves for 90º *	
		Curve radius = diameter	0.50
		Curve radius = 2 to 8 diam.	0.25
		Curve radius = 8 to 20 diam.	0.10
VIII	5.11	Bends where radius is equal to diameter	
		90º Bend	0.50
		60º Bend	0.43
		45º Bend	0.35
		22-1/2º Bend	0.20
		Manhole on line with 60º Lateral	0.35
		Manhole on line with 22/1/2º Lateral	0.75

* Where bends other than 90^0 are used, the 90° bend coefficient can be used with the following percentage factor applied.

60^0 Bend - 85%; 45° Bend - 70%; 22-1/2° Bend - 40%

The values of the coefficient "K_j" for determining the loss of head due to obstructions in pipes are shown in Table 5.4 and the coefficients are used in the following equation to calculate the head loss at the obstruction:

$$Hj = Kj\ {}^{v}2^{2}/2g$$

Table 14.5.2 Head Loss Coefficients Due To Obstructions			
A/A_o*	**K_i**	**A/A_o***	**K_i**
1.05	0.10	3.0	15.0
1.1	0.21	4.0	27.3
1.2	0.50	5.0	42.0
1.4	1.15	6.0	57.0
1.6	2.40	7.0	72.5
1.8	4.00	8.0	88.0
2.0	5.55	9.0	104.0
2.2	7.05	10.0	121.0
2.5	9.70		
* A/A_o = Ratio of area of pipe to area of opening at obstruction.			

The values of the coefficient "Kj" for determining the loss of head due to sudden enlargements and sudden contractions in pipes are shown in Table 5.3, and the coefficients are used in the following equation to calculate the head loss at the change in section:

$H_j = K_j\ v^2/2g$ where,
V = Velocity in smaller pipe

Table 14.5.3 Head Loss Coefficients Due To Sudden Enlargements and Contractions		
$\frac{D_2}{D_1}$*	**Sudden Enlargements K_i**	**Sudden Contractions K_i**
1.2	0.10	0.08
1.4	0.23	0.18
1.6	0.35	0.25
1.8	0.44	0.33
2.0	0.52	0.36
2.5	0.65	0.40
3.0	0.72	0.42
4.0	0.80	*0.44*
5.0	0.84	0.45
10.0	0.89	0.46
~	0.91	0.47
* D_2/D_1 = Ratio of larger to smaller diameter		

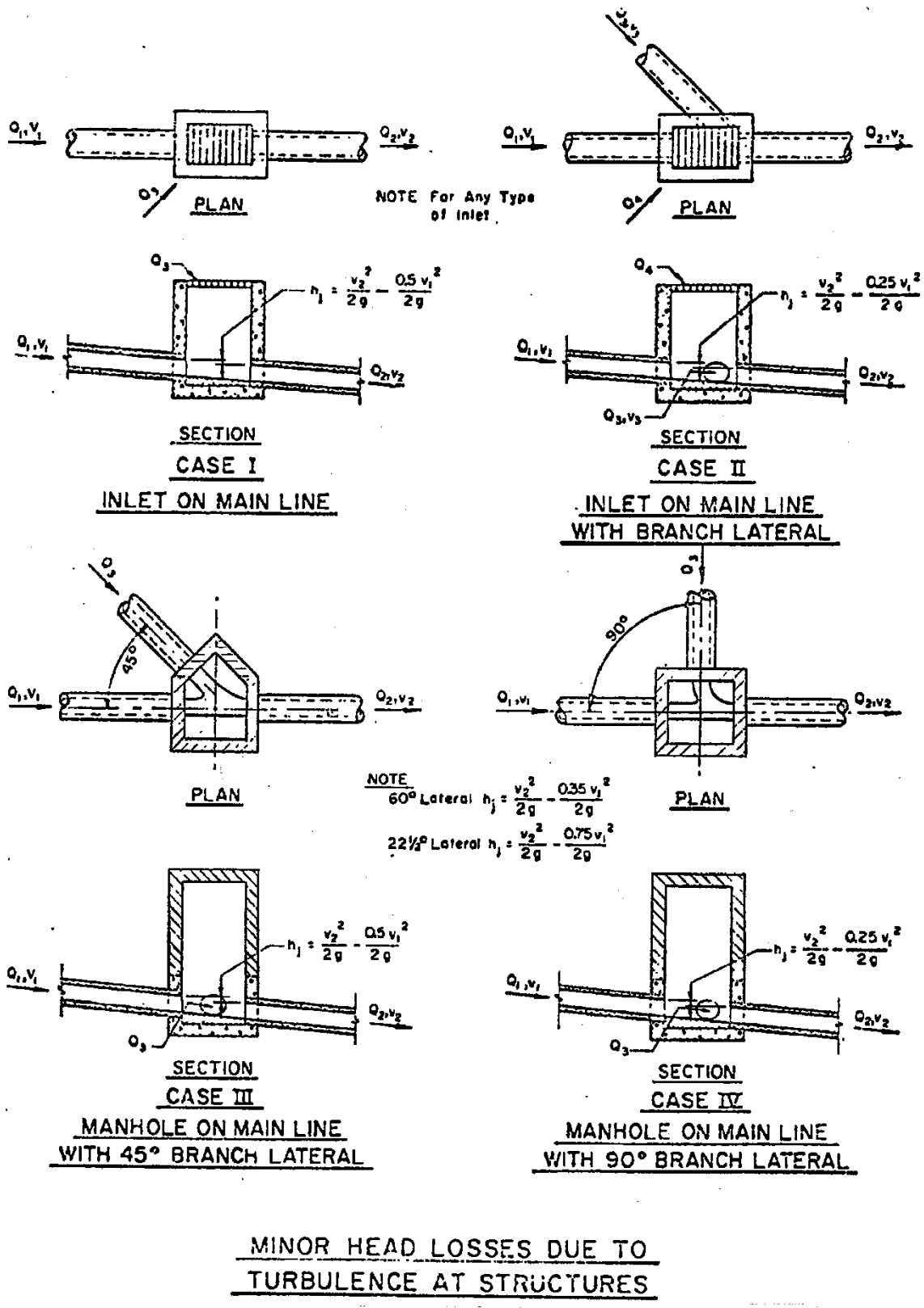

Figure 14.5.5 Minor Head Losses at Structures (1 of 2)

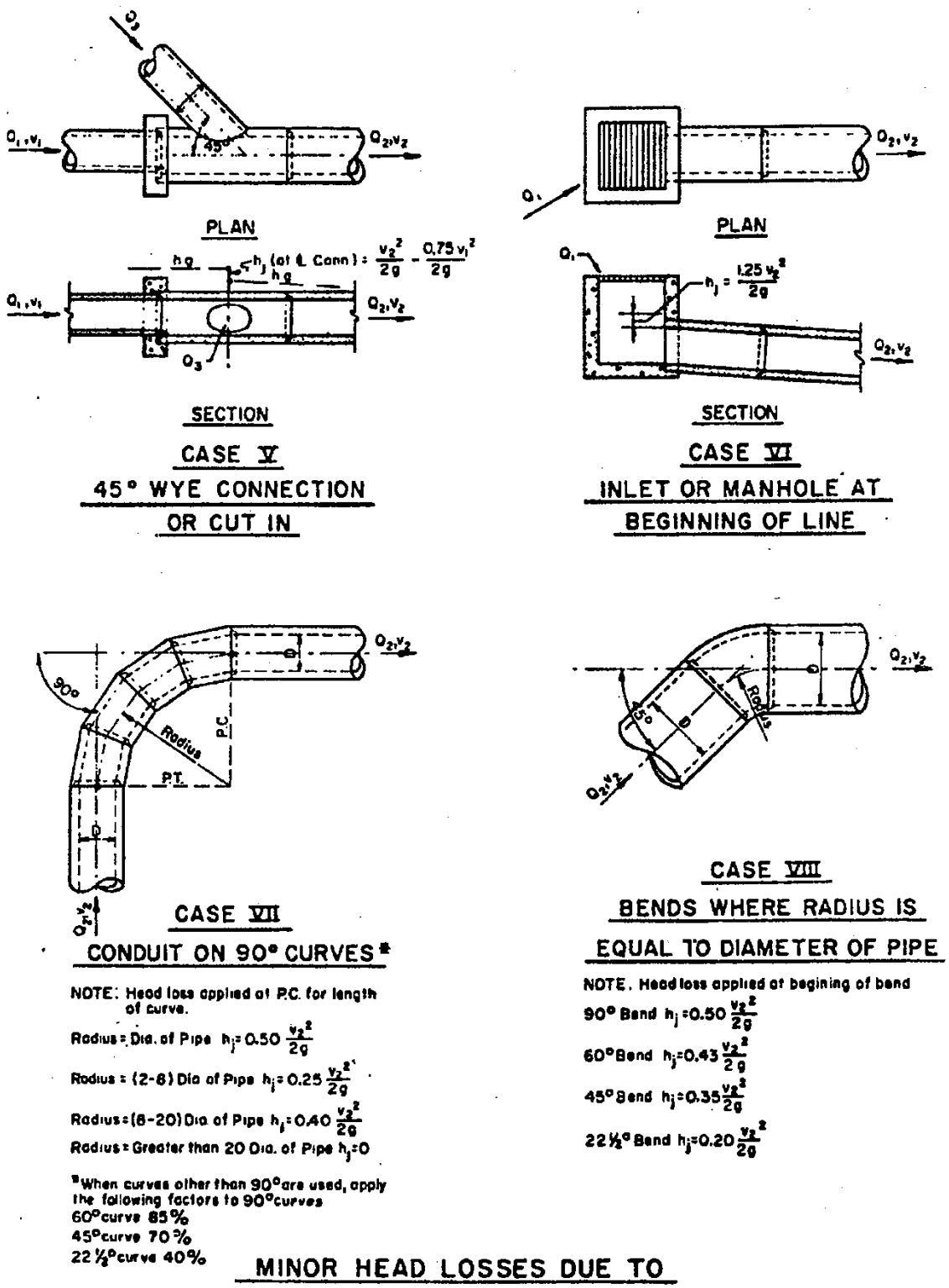

Figure 14.5.6 Minor Head Losses at Structures (1 of 2)

14.5.3.3 Storm Drain Design Examples

All storm drains shall be designed by the application of the Manning Equation either directly or through appropriate charts or nomographs. In the preparation of hydraulic designs, a thorough investigation shall be made of all existing structures and their performance on the waterway in question.

An example of the use of the method used in the manual for the design of a storm drainage system is outlined below and shown on Figure 5.7 Computation Sheet. The design theory has been presented in the preceding sections with their corresponding tables and graphs of information.

Preliminary Design Considerations

- Prepare a drainage map of the entire area to be drained by proposed improvements. Contour maps serve as excellent drainage area maps, when supplemented by field reconnaissance. The scale of the map shall not be less than 1” = 200’ for project area although smaller scale maps for large offsite drainage areas.
- Prepare a layout of the proposed storm drainage system, locating all inlets, manholes, mains, laterals, ditches, culverts, etc.
- Outline the drainage area for each inlet in accordance with present and future street development.
- Indicate on each drainage area the code identification number and the direction of surface runoff by small arrows. Provide a runoff table showing area, “C” factor for each portion and composite “e”, Ta, I5, Q5, I100 and Q100.
- Show all existing underground utilities.
- Establish design rainfall frequency.
- Establish minimum inlet time of concentration.
- Establish the typical cross section of each street.
- Establish permissible spread of water on all streets within the drainage area.
- Plot profile of existing natural ground along the center line of the proposed storm drain.
- Extend downstream plan and profile beyond the end of the pipe to a point of acceptable outfall.

COMPUTATION SHEET
HYDRAULIC COMPUTATIONS FOR STORM DRAINS

STORM DRAIN HYDRAULIC CALCULATIONS TABLE

FROM	TO	Pipe Length	Drainage Area Incremental		Drainage Area Total	Runoff	Incr.	Total	Time of Concentration			5-year	100-year	Q5	Q100	Inlet	Q	Pipe			HGL		HEAD LOSS CALCULATIONS							Design	Invert Elev.		T/C	
						"c"	cA	cA	Inlet	Travel	Total	Intensity	Intensity	Runoff	Runoff	bypass	pipe	Size	n	Sf	D/S	U/S	V1 (in)	V2 (out)	$V1^2/2G$	$V2^2/2G$	Kj	$KjV1^2/2G$	Hk	HGL	FROM	TO	ELEV.	
		feet	No.	Area	Area				min.	min.	min.	in/hr.	in/hr.	cfs	cfs	cfs	cfs	in.		ft/ft	Elev.	Elev.	ft/sec	ft/sec	ft.	ft.		ft.	ft.	Elev.	ft.	ft.	ft.	COMMENTS
1	2	3	4	5	6	7	8	9	10	11	12	13	14	15	16	17	18	19	20	21	22	23	24	25	26	27	28	29	30	31	32	33	34	
LINE A																																		
4+00	5+42	142	A1	35.00	35.00	0.65	22.75	22.75	15.00		15.00	4.86	7.98	110.57	181.55	14.50	167.05	48	0.013	0.0135	818.17	820.09	13.29	13.29	2.74	2.74	0.00	0.00	0.00	820.09	813.16	816.00	822.50	A1=future phases
1+86	4+00	214	A2	0.50	35.50	0.65		23.08	15.00	0.18	15.18	4.86	7.98	112.14	184.14	11.80	172.34	54	0.013	0.0077	816.08	817.72	13.29	10.84	2.74	1.82	0.50	1.37	0.45	818.17	811.02	813.16	819.50	
1+43	1+86	43	A3	0.18	35.68	0.65	0.12	23.19	15.00	0.51	15.51	4.86	7.98	112.71	185.07	0.00	185.07	54	0.013	0.0089	814.96	815.34	10.84	11.64	1.82	2.10	0.75	1.37	0.74	816.08	809.59	810.52	818.00	
0+50	1+43	93	A4	0.56	36.24	0.65	0.36	23.56	15.00	0.57	15.57	4.86	7.98	114.48	187.98	0.00	187.98	60	0.013	0.0052	814.10	814.59	11.64	9.57	2.10	1.42	0.50	1.05	0.37	814.96	808.53	809.09	817.78	min Hk = 0.10'
0+00	0+50	50			36.24	0.65		23.56	15.00	0.57	15.57	4.86	7.98	114.48	187.98	0.00	187.98	60	0.013	0.0075	813.23	813.61	9.57	9.57	1.42	1.42	0.35	0.00	0.50	814.10	808.23	808.53	---	45° BEND
LINE A-2																																		
A 1+86	n. inlet	22	see note	0.25	0.25	0.65	0.09	0.16	15.00		15.00	4.86	7.98	1.24	2.65	0.00	2.65	21	0.013	0.0003	818.17	818.18	0.00	1.10	0.00	0.02	1.25	0.00	0.02	818.20	812.02	815.00	819.50	half A1 bypass + half A2
A 1+86	s. inlet	24	see note	0.25	0.25	0.65	0.09	0.16	15.00		15.00	4.86	7.98	1.24	2.65	0.00	2.65	21	0.013	0.0003	818.17	818.18	0.00	1.10	0.00	0.02	1.25	0.00	0.02	818.20	812.02	815.00	819.50	half A1 bypass + half A2
LINE A-3																																		
A 1+86	n. inlet	22	see note	0.18	0.18	0.65	0.09	0.12	15.00		15.00	4.86	7.98	9.28	14.08	0.00	14.08	21	0.013	0.0079	816.08	816.25	0.00	5.86	0.00	0.53	1.25	0.00	0.67	816.91	811.52	813.50	818.00	half (A1+A2 bypass) + half A3
A 1+86	s. inlet	24	see note	0.18	0.18	0.65	0.09	0.12	15.00		15.00	4.86	7.98	9.28	14.08	0.00	14.08	21	0.013	0.0079	816.08	816.27	0.00	5.86	0.00	0.53	1.25	0.00	0.67	816.93	811.52	813.50	818.00	half (A1+A2 bypass) + half A3
LINE A-4																																		
0+20	s, inlet	18	A4/2	0.28	0.28	0.65	0.18	0.18	15.00		15.00	4.86	7.98	0.88	1.45	0.00	1.45	21	0.013	0.0001	814.97	814.97	0.00	0.60	0.00	0.01	1.25	0.00	0.01	814.98	811.67	813.07	817.57	
0+20	0+37	17	A4/2	0.28	0.28	0.65	0.18	0.18	15.00		15.00	4.86	7.98	0.88	1.45	0.00	1.45	21	0.013	0.0001	814.97	814.97	0.00	0.60	0.00	0.01	1.25	0.00	0.01	814.98	811.67	813.07	817.57	north inlet
0+00	0+20	20			0.56	0.65	0.00	0.36	15.00		15.00	4.86	7.98	1.77	2.90	0.00	2.90	24	0.013	0.0002	814.96	814.96	0.60	0.92	0.01	0.01	0.75	0.00	0.01	814.97	810.22	811.42	817.78	
LINE B																																		
5+98	6+15	17	B1/2	3.20	3.20	0.65	2.08	2.08	15.00		15.00	4.86	7.98	10.11	16.60	6.49	10.11	21	0.013	0.0041	817.70	817.77	0.00	4.20	0.00	0.27	1.25	0.00	0.34	818.12	814.73	815.04	819.54	west inlet
4+50	5+98	148	B1/2	3.20	6.40	0.65	2.08	4.16	15.00	0.07	15.07	4.86	7.98	20.22	33.20	12.98	20.22	24	0.013	0.0080	816.02	817.20	4.20	6.44	0.27	0.64	0.50	0.14	0.51	817.70	813.00	814.48	819.48	
2+15	4+50	235	B2	5.20	11.60	0.65	3.38	7.54	15.00	0.45	15.45	4.86	7.98	36.64	60.17	23.53	36.64	30	0.013	0.0080	813.76	815.63	6.44	7.46	0.64	0.87	0.75	0.48	0.38	816.02	810.15	812.50	818.00	
0+50	2+15	165	B3	2.50	14.10	0.65	1.63	9.17	15.00	0.98	15.98	4.86	7.98	44.54	73.14	20.00	53.14	36	0.013	0.0063	812.27	813.31	7.46	7.52	0.87	0.88	0.50	0.43	0.44	813.76	808.00	809.65	815.65	
0+00	0+50	50	B4	1.80	15.90	0.65	1.17	10.34	15.00	1.34	16.34	4.86	7.98	50.23	82.47	0.00	82.47	48	0.013	0.0075	811.53	811.91	7.52	6.56	0.88	0.67	0.35	0.31	0.36	812.27	805.00	807.00	814.00	channel HGL=811.53
LINE B-1A																																		
B 5+98	n. inlet	17	B1/2	3.20	3.20	0.65	2.08	2.08	15.00		15.00	4.86	7.98	10.11	16.60	6.49	10.11	21	0.013	0.0041	817.70	817.77	0.00	4.20	0.00	0.27	1.25	0.00	0.34	818.12	814.73	815.04	819.54	east inlet
LINE B-2 A&B																																		
B 4+50	e. inlet	18	B2/2	2.60	2.60	0.65	1.69	1.69	15.00		15.00	4.86	7.98	13.11	19.98	11.77	8.21	21	0.013	0.0027	816.02	816.07	0.00	3.41	0.00	0.18	1.25	0.00	0.23	816.29	812.50	813.50	818.00	includes B1 bypass
B 4+50	w. inlet	18	B2/2	2.60	2.60	0.65	1.69	1.69	15.00		15.00	4.86	7.98	13.11	19.98	11.77	8.21	21	0.013	0.0027	816.02	816.07	0.00	3.41	0.00	0.18	1.25	0.00	0.23	816.29	812.50	813.50	818.00	includes B1 bypass
LINE B-3 A&B																																		
B 2+15	e. inlet	18	B3/2	1.25	1.25	0.65	0.81	0.81	15.00		15.00	4.86	7.98	10.97	18.25	10.00	8.25	21	0.013	0.0027	813.76	813.81	0.00	3.43	0.00	0.18	1.25	0.00	0.23	814.04	810.65	811.15	815.65	includes B2 bypass
B 2+15	w. inlet	18	B3/2	1.25	1.25	0.65	0.81	0.81	15.00		15.00	4.86	7.98	10.97	18.25	10.00	8.25	21	0.013	0.0027	813.76	813.81	0.00	3.43	0.00	0.18	1.25	0.00	0.23	814.04	810.65	811.15	815.65	includes B2 bypass
LINE B-4																																		
0+20	w. inlet	18	B4/2	0.90	0.90	0.65	0.59	0.59	15.00	0.00	15.00	4.86	7.98	2.84	14.67	0.00	14.67	24	0.013	0.0042	812.44	812.51	0.00	4.67	0.00	0.34	1.25	0.00	0.42	812.94	808.65	809.50	814.00	includes B3 bypass
0+20	0+38	18	B4/2	0.90	0.90	0.65	0.59	0.59	15.00	0.00	15.00	4.86	7.98	2.84	14.67	0.00	14.67	24	0.013	0.0042	812.44	812.51	0.00	4.67	0.00	0.34	1.25	0.00	0.42	812.94	808.65	809.50	814.00	east inlet; B3 bypass
0+00	0+20	15			1.80	0.65	0.00	1.17	15.00	0.00	15.00	4.86	7.98	5.69	29.34	0.00	29.34	33	0.013	0.0031	812.27	812.31	4.67	4.94	0.34	0.38	0.75	0.25	0.12	812.44	807.00	807.90	814.00	

Notes:
1 Time of concentration (and intensity) only changes at downstream junctions. Paired inlets do not constitute a downstream junction.
2 HGL must be below grade along main or at least 1' below top of curb at each inlet (including entry loss of 1.25v2/2g).
3 Inlet spacing shall be determined by 5-year to top of curb or 100-year filling right-of-way, whichever is most restrictive.
4 Minimum head loss shall be 0.10 feet in a subcritical flow regime. Supercritical flow regimes do not generate head losses.

Figure 14.5.7 Computations Sheet for Storm Drains

Runoff Computations

Storm drain hydraulics are shown on Figure 5.7, Storm Drain Hydraulic Calculations Computation Sheet. The first 18 columns of the computation sheet cover the tabulation for runoff calculations:

Column 1	Enter the downstream storm drain station number.
Column 2	Enter the upstream storm drain station number. This is the design point. Design should start at the farthest upstream point.
Column 3	Enter the distance (in feet) between the storm drain stations.
Column 4	Enter the designation of the drainage area(s) at the design point in Column 2 corresponding to the designations shown on the drainage area map.
Column 5	Enter the area in acres for the drainage area identified in Column 4.
Column 6	Enter the total drainage area in acres within the system corresponding to storm drain station shown in Column 2.
Column 7	Enter the runoff coefficient “C” for the drainage area shown in Column 5.
Column 8	Multiply Column 5 by Column 7 for each area.
Column 9	Determine the total “CA” for the drainage system corresponding to the inlet or manhole shown in Column 2.
Column 10	Determine inlet time of concentration (See iSWM Hydrology Technical Manual Section 1.2.4).
Column 11	Determine flow time in the storm drain in minutes. The flow time is equal to the distance in Column 3 divided by 60 times the velocity of flow through the storm drain in ft/sec.
Column 12	Total time of concentration in minutes. Column 10 plus Column 11. Note that time of concentration only changes at a downstream junction with another drainage area(s). It remains the same from an inlet or junction to the next inlet or junction picking up additional drainage areas. The junction of two paired inlets with each other is not a downstream junction.
Column 13	The intensity of rainfall in inches per hour for the 5-year storm frequency from the appropriate county rainfall table in the iSWM Hydrology Technical Manual.
Column 14	The intensity of rainfall in inches per hour for the 100-year storm frequency from the appropriate county rainfall table in the iSWM Hydrology Technical Manual.
Column 15	The 5-year storm runoff in cfs. Column 9 times Column 13.
Column 16	The 100-year storm runoff in cfs. Column 9 times Column 14.
Column 17	The proposed inlet bypass during a 100-year storm. This should generally correspond to the carry-over flow “q” in Column 31 of the On-Grade Inlet Capacity Calculations Table (minor variances may occur due to travel time routing in the Hydraulics Table).
Column 18	Design Discharge for the storm drain system (“Qpipe”) in cfs. This should be the greater of a substantial portion of Q5 (Column 15) or Q100-Qbypass (Column 16 minus Column 17).

Hydraulic Design

After the computation of the quantity of storm runoff entering each inlet, the size and gradient of pipe required to carry off the design storm are determined. Any number of computer programs are available to provide design assistance for pipe sizing to the engineer. However, storm drain hydraulics must be

converted and reported in Figure 5.7, Storm Drain Hydraulics Calculation Table. The hydraulic grade line (HGL) must be calculated for all storm drain mains and laterals using appropriate head loss equations. In all cases, the storm drain HGL must remain below grade and must be at least one foot below top of curb at any inlet.

In partial flow conditions, the HGL represents the actual water surface within the pipe. Note that for partial flow conditions, the velocity of the flow should be calculated based on actual area of flow, not the full flow area of the pipe or box.

Although the table is presented from upstream to downstream, the calculations are normally performed from the outfall upstream to each inlet. Unless partial flow conditions exist, the beginning hydraulic gradient (Column 22 of the last downstream section) must begin at either the top of pipe or at the hydraulic gradient of the receiving stream at the coincident frequency provided in Table 14.1.10, whichever is higher.

Column 19	Enter the selected pipe size.
Column 20	Enter the appropriate Manning's roughness coefficient "n" from Table 5.1.
Column 21	Enter the required slope of the frictional gradient (hydraulic gradient) determined by Manning's equation. The pipe shall be designed on a grade such that the inside crown of the pipe coincides or is below the HGL when flowing full. In a partial flow condition, the friction slope is the slope of the water surface and should follow the slope of the pipe.
Column 22	This is the beginning hydraulic gradient of the line. It is equal to the Design HGL (Column 31) for the next downstream segment, or the beginning HGL of the system as described above.
Column 23	This is the upstream HGL before the structure and is calculated as Column 22 plus the friction loss (Column 3 times Column 21).
Column 24	Velocity of flow in incoming pipe (main line) at the junction, inlet or manhole at the design point identified in Column 2.
Column 25	Velocity of flow in outgoing pipe (i.e. the pipe segment being analyzed) at junction, inlet or manhole at design point identified in Column 2.
Column 26	Velocity head of the velocity in Column 24.
Column 27	Velocity head of the velocity in Column 25.
Column 28	Head loss coefficient "Kj", at junction, inlet or manhole at design point from Table 5.2, 5.3, or 5.4, or from Figure 5.6 and 5.7.
Column 29	Multiply Column 26 by Column 28.
Column 30	Head Loss at Structure. At a junction or change in pipe size, this is Column 27 minus Column 29. At a bend or inlet, this is Column 27 times Column 28. In all cases this is 0.10' minimum. EXCEPTION: In a supercritical flow regime with partial flow conditions, head losses are not generated at upstream junctions. These may be designated as "SUPERCRITICAL PARTIAL FLOW" in the head loss calculations, but must be supported by Froude Number in the comments column. Any other proposed deviations from standard head loss calculations due to other unusual flow regimes must be approved by D-TPW on a case-by-case basis.

Column 31	Design HGL at the design point identified in Column 2. Column 23 plus Column 30. This is the beginning HGL (Column 22) for any upstream pipe discharging into that junction.
Column 32	Invert elevation for the pipe being analyzed at the downstream storm drain station in Column 1.
Column 33	Invert elevation for the pipe being analyzed at the design point (upstream storm drain station) in Column 2.
Column 34	Top of curb elevation at the design point in Column 2.

The above procedure is followed for each section of the storm drain. At the outfall, the hydraulic gradient of the line must be at the same elevation or above the gradient of the conduit or channel receiving the storm runoff discharge. See iSWM *Hydraulics Technical Manual* Sections 1.2.10 for guidance on outfall hydraulic gradients.

With the hydraulic gradient established for a particular line, considerable latitude is available for the physical placement of the pipe flow line elevations. The inside top of the pipe must be on or below the hydraulic gradient, thus allowing the pipe to be lowered where necessary to maintain proper cover and to minimize grade conflicts with existing utilities.

14.5.3.4 General Construction Standards

Utilities
General – In the design of a storm drainage system, the engineer is frequently confronted with the problem of crossings between the proposed storm drain and existing or proposed utilities such as water, gas and sanitary sewer lines.

Water Lines – All existing water lines in the immediate vicinity of the proposed storm drains shall be clearly indicated on both the plan and profile sheets. When design indicates that an intersection of the storm drain line and the water main exists and the proposed storm drain cannot be economically relocated, then the existing water line shall be adjusted and approved by Director of Public Services.

Sanitary Sewers – All existing or proposed sanitary sewers in the immediate vicinity of the proposed storm drains shall be clearly indicated on both plan and profile sheets. When design indicates that an intersection of the storm drain line and the sanitary sewer exist, then either line should be adjusted by relocation. If neither line can be economically relocated, then an alternative design may be considered, provided it is supported by hydraulic calculations and approved by the Storm Water Manager and the Director of Public Services. The alternative design may include a box section in the storm drain to go over or under the sanitary sewer, or a sanitary sewer crossing through the storm drain. If the latter is chosen, the crossing must be installed in a manhole or vault to provide both access and additional capacity. In either alternative, the sanitary sewer must be ductile iron pipe or other material approved by the Director of Public Services.

All Other Utilities – All other utilities in the immediate vicinity of the proposed storm drain shall be clearly indicated on both the plan and profile sheets. Gas lines and other utilities not controlled by elevation shall be adjusted when the design indicates that an intersection of the storm drain line and the utility exists and the proposed storm drain cannot be economically relocated.

Headwalls, Culverts, and Other Structures
For headwalls, culverts and other structures, standard details adopted by the Texas Department of Transportation (TxDOT) shall be used. The appropriate detail sheets should be included in any construction plans. All headwalls and culverts should be extended to or beyond the street right-of-way. TxDOT-approved pedestrian rail shall be used for any headwall within 10’ of a sidewalk or other normal pedestrian area.

Minimum Pipe Sizes
Minimum pipe sizes are 24" diameter for mains, 21" diameter for inlet leads, and 18" diameter for driveway culverts less than 60 feet in length. Minimum sizes of box culverts should have equivalent cross-sectional areas to the minimum pipe diameters.

Pipe Connections and Curved Alignment
Prefabricated wye and tee connections and other unusual configurations can usually be fabricated by the pipe manufacturer. Radial pipe is can also be fabricated by the pipe manufacturer and shall be used through all curved alignments. When field connections or field radii must be used, all joints and gaps must be fully grouted to prevent voids and cave-ins caused by material washout into the storm drain.

Inlets
All curb inlets shall be 5, 10, 15 or 20 feet in length and shall have depressed openings. Recessed inlets shall be provided on arterial streets. Proposed inlet lengths greater than 20 feet must be approved by the Storm Water Manager. Care should be taken in laying out inlets to allow for adequate driveway access between the inlet and the far property line. Standard inlet depth is 4.5' at the lead line and 4.0' at the opposite end, with the bottom sloped to drain to the lead line. Manhole steps shall be installed for any inlet over five feet deep. Lead lines shall be plumbed into the inlet at a manhole opening to expedite mechanical cleaning and inspection.

Drop inlets shall be minimum four-foot square and shall have manhole access and steps. Due to excessive clogging, grate inlets are not allowed on any public storm drain except as specifically approved by the Storm Water Manager.

Streets
To minimize standing water, the minimum street grade shall be 0.50%. Along a curve, this grade shall be measured along the outer gutter line. The minimum grade along a cul-de-sac or elbow gutter shall be 0.70%. Alternatively, elbows may be designed with a valley gutter along the normal outer gutter line, with two percent cross slope from curb to the valley gutter. The minimum grade for any valley gutter shall be 0.50%. A PVI shall be used instead of a vertical curve where the total gradient change is no more than two percent ($\Delta \leq 1.0\%$).

Flow in Driveways and Intersections
At any intersection, only one street shall be crossed with surface drainage and this street shall be the lower classified street. Where an alley or street intersects a street, inlets shall be placed in the intersecting alley or street whenever the combination of flow down the alley or intersecting street would cause the capacity of the downstream street to be exceeded. Inlets shall be placed upstream from an intersection whenever possible. Surface drainage from a 5-year flood may not cross any street classified as a thoroughfare or collector. Not more than 3.0 cfs in a 5-year flood may be discharged per driveway at a business, commercial, industrial, manufacturing, or school site. In all cases, the downstream storm drainage system shall be adequate to collect and convey the flow, and inlets provide as required. The cumulative flows from existing driveways shall be considered and inlets provided as necessary where the flow exceeds the specified design capacity of the street.

14.5.4 Hydraulic Design of Culverts, Bridges, Open Channels, and Detention Structures

14.5.4.1 Stone Rip Rap Design – Gregory Method Results Table

Table 5.4 shall be used to report results of the Gregory channel riprap design method. Table 5.5 shall be used to report the results of the Gregory Culvert Outfall Protection Method. A properly designed bedding layer is required under the granular bedding.

Table 14.5.4				
ROCK RIPRAP SIZING - G5REGORY METHOD				
From iSWM Hydraulics Technical Manual, April 2010 , Section 3.2.7				
Step 1: Calculate Boundary Shear:	Units	Size by Frequency (Select		
		100-	10-	2-year
Q = peak discharge	cfs			
b = bottom width of channel	feet			
y = depth of peak flow	feet			
γ_S = specific weight of stone (150-175 lb/ft³)	lb/ft³			
A = cross-sectional area of flow	ft²			
WP = wetted perimeter	feet			
R = hydraulic radius of channel = **A/WP**	feet			
S = slope of energy gradient	ft/ft			
T_o = average tractive stress on channel bottom = $\boldsymbol{\gamma_w}$***R*S** (γ_w = 62.4 lb/ft³)	lb/ft²			
Φ = Angle of side slope (14° for 4:1 slopes)	degree			
Θ = Angle of repose of rock, usually 40°)	degree			
T_o' = average tractive stress on channel side slopes = $\mathbf{To[1-(Sin2\Phi/Sin2\Theta)]^{1/2}}$	lb/ft²			
Step 2: Determine the tractive stress in a bend in the channel:				
T = the greater of T_o or T_o' from above	lb/ft²			
r = centerline radius of bend (10000' if straight)	feet			
w = water surface width at upstream end of bend	feet			
T_b = local tractive stress in bend = $\mathbf{3.15T(r/w)^{-1/2}}$	lb/ft²			
Step 3: Determine D_{50} size of riprap stone (size at which 50% of the gradation is finer weight):				
T = Design shear stress (greatest of T_o, T_o' or T_b)	lb/ft²			
D_{50} = required average stone size = $\mathbf{T/0.04(\gamma_s-\gamma_w)}$	feet			
Maximum d_{50} (controlling size)	inches			
Step 4: Select minimum riprap thickness from grain size curves (Fig. 3.12 to 3.17 iSWM Hydraulics Technical Manual).				
D_{50} (max)= (Select from smaller side of band at 50% finer gradation)	lb/ft²			
Riprap Size = (min thickness is 12")	inches			
Step 5: Select riprap gradations table (Fig. 3.18 to 3.19 iSWM Hydraulics Technical Manual)				
Riprap Gradation Figure based on riprap thickness in Step 4	Figure			
Step 6: Select bedding thickness from grain size curves (Fig. 3.12 to 3.17 iSWM Hydraulics Technical Manual)				
Bedding Gradation Figure	Figure			

Note: See steps 7-10 in the iSWM Hydraulics Technical Manual Section 3.2.7 for additional guidance.

Table 14.5.5 ROCK RIPRAP SIZING - CULVERT OUTFALL PROTECTION From iSWM Hydraulics Technical Manual, April 2010 , Section 3.2.7				
Determine D50 size of riprap stone (size at which 50% of the gradation is finer weight):	Units	Size by Frequency (Select Largest)		
		100-year	10-year	2-year
V = outfall velocity	ft/sec			
γ_S = specific weight of stone (150-175 lb/ft³)	lb/ft³			
D50 = $\mathbf{V^{1/2}/[1.8*(2g(\gamma_s-\gamma_w)/\gamma_w)^{1/2}]}$ (γw = 62.4 lb/ft³)	feet			
Maximum d_{50} (controlling size)	inches			

14.5.5 Storm Water Facility Maintenance Agreements

A *Stormwater Facility Maintenance Agreement* must be prepared by the engineer for each stormwater control that will not be wholly maintained by the City of Azle, as part of the Operations and Maintenance Plan submittal. This agreement must outline both preventive maintenance tasks as well as major repairs, identify the schedule for each task, assign clear roles to effected parties, and provide a maintenance checklist to guide future owners including an annual self-inspection to be provided to the CITY OF AZLE.

Details of the agreement must be set forth in a series of exhibits:

Exhibit A Legal Description--this includes the Meets and Bounds, a Surveyor's Drawing of the area occupied by the facility, and a copy of the Preliminary Plat containing the facility.

Exhibit B Design Plan and Specifications-these are summary documents intended for the use of future owners in conducting routine maintenance, inspections and major repairs.

- **Design Data and Calculations**—this can be in the form of a letter or statement from the engineer which summarizes critical design calculations related to the functionality of the facility such as storage volume or TSS removal, and attest to the facility conforming to applicable iSWM standards.
- **Schematic Plan**—this should be prepared by the engineer from construction drawings to show the general layout of the facility. Major features requiring regular or special maintenance should be shown and labeled in general terms understandable to a layman. A profile should be given showing critical elevations that control the function and capacity of the facility, and one or more cross-sections should be provided to indicate the general grading of the facility.
- **Landscaping-**Vegetation should be shown consistent with the approved Landscape Plan, either on the Schematic Plan or as a separate drawing.

Exhibit C Operations and Maintenance Plan-Specific maintenance tasks should be defined for each element of the facility. Maintenance tasks specific to the facility should be described in simple terms consistent with nomenclature contained in the Schematic and Landscape plans. An inspection and maintenance frequency should be established for each task.

Exhibit D Maintenance Checklist-A checklist consistent with the Operations and Maintenance Plan shall be provided for the use of future owners in performing routine and special maintenance tasks. This list should describe work required and frequency in language that is easy to understand and specific for the facility to be maintained. This form will be completed by the Owner and submitted

to the City of Azle annually as part of a regular self-inspection program. See Figure 5.10 for an example checklist for a simple detention basin.

Additional guidance for facility maintenance is provided in the iSWM Technical Manual, for several types of stormwater controls. The engineer must certify that the construction has been completed in accordance with the general plans and Schematic Plan. After approval of construction by the City of Azle, an engineer is expected to provide guidance to the owner's representative in implementing the approved maintenance program and to co-sign the first annual inspection after the construction. A checklist for preparing a Stormwater Facility Maintenance Agreement is provided in Chapter 5, Appendix A, Form CW-8.

FIGURE 14.5.10 INSPECTION CHECKLIST FOR SIMPLE DETENTION BASIN

Facility Name: _____ **Facility Agreement Number:** _____

Basin/Pond Number: _____ **Inspected By:** _____ **Date:** _____

Type of Inspection: annual ___, quarterly ___, monthly ___, routine ___, or storm event ___ (# days since event ____

Basin Conditions:

1. Is there standing water or wet spots? ..... Yes___ No ___ Comments _____
2. Does sides or bottom show signs of erosion, settling, cracking, etc? Yes___ No ___ Comments _____
3. Does dam or emergency spillway show signs of erosion, settling, cracking, or other problems? ..... Yes___ No ___ Comments _____
4. Is there evidence of animal burrowing in dam? ..... Yes___ No ___ Comments _____
5. Is there evidence of changes in shape or volume of basin? ..... Yes___ No ___ Comments _____
6. Do vegetated areas need mowing? ..... Yes___ No ___ Comments _____
7. Are there trees or woody growth in dam? ..... Yes___ No ___ Comments _____
8. Are there areas that need to be re-vegetated? ..... Yes___ No ___ Comments _____
9. Is there any accumulation of silt, trash, debris or litter in the basin? .. Yes___ No ___ Comments _____
10. Are there any other basin maintenance activities needed?..... Yes___ No ___ Comments _____

Structural Components:

1. Are pipes, channels, trash racks, etc. free of obstructions? ..... Yes___ No ___ Comments _____
2. Are pipes, spillway or trash racks in need of repair? ..... Yes___ No ___ Comments _____
3. Is the low flow or trickle channel in need of repair? ..... Yes___ No ___ Comments _____
4. Is the outfall channel in need of repair? ..... Yes___ No ___ Comments _____
5. Are there any other structural maintenance activities needed?..... Yes___ No ___ Comments _____

Plan for correcting deficiencies: _____

_____

_____

_____

Signature: _____ Owner's Representative

Date: _____

14.5.6 Single Family Residential Lot Drainage Site Grading

An engineered overall site grading plan shall be submitted with the subdivision's paving and drainage plans. The plan shall be consistent with the drainage area map. The plan shall include flow arrows and Type A, B, or C drainage for each lot within the subdivision as described in Federal Housing Administration (FHA) Land Planning Bulletin No. 3, as amended (see Appendix D). Type 1 or 2 block grading as shown in the FHA information is preferred. Type 3 and block 4 grading is allowed only if:

a. a swale, flume or channel is constructed at the rear of the lot to intercept runoff;

and

b. runoff from 3 or more lots is collected and conveyed within an underground drainage system, swale, flume or channel contained within a dedicated easement.

The engineer may utilize berms and swales to redirect flows. Grass swales shall have a minimum slope of 2% except where contained within a drainage easement, in which case a 1% minimum slope can be allowed. The engineer shall provide more detailed information in addition to the lot grading type (A, B, or C) by indicating spot evaluations on each lot. For Type B lots, side-yard swales should extend from behind the rear building line to the street, in order to collect runoff from the roof. Roof drains, if used in along the rear building line of these lots, should use splash blocks to direct the runoff into the side swales.

The finished floor elevation and surrounding grading must conform to current building codes adopted by the City and provide a minimum height of the finished floor of 12 inches above the surrounding ground. Areas within 10' of the foundation should be sloped to drain away from the foundation. Minimum slopes of 2% for structural improvements and 5% for non-structural elements, respectively, must be maintained away from the footing. See Figure 5.11.

If the site is complex and an overall site grading plan cannot be developed in accordance with the HUD standards, an individual grading plan for each lot shall be submitted by an engineer prior to issuing the Building Permit. The individual grading plans shall be coordinated with surrounding lots. For these complex plans, an "as-built" letter shall be submitted prior to final inspection.

Four inches of topsoil shall be provided for all disturbed areas not protected by impervious cover, in order to sustain vegetation after construction has been completed.

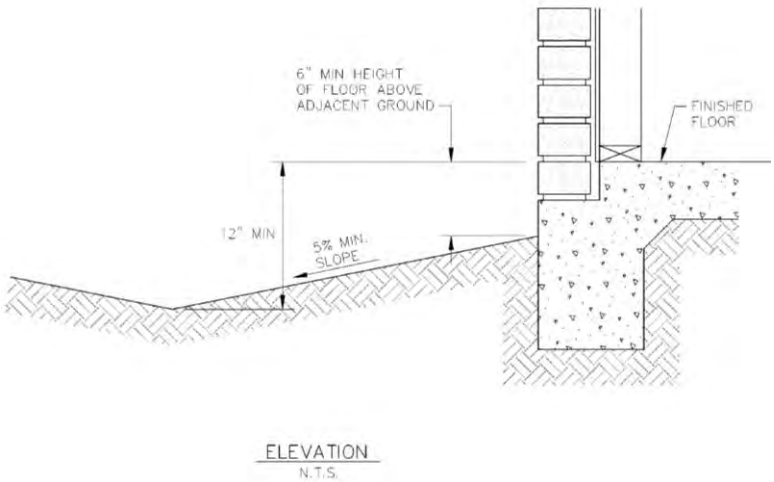

Figure 14.5.11 Grading Requirements Next to Building Foundation

Appendix A – City of Azle Detailed Checklists and Forms

ENGINEER'S CHECKLIST FOR CONCEPTUAL iSWM SITE PLAN

Attach additional sheets as necessary for comments and descriptions.
Fold all sheets to 8½" x 11" or 9" x 12" and bind with a clip.

1. Project Information

A. *Name of Development:* _____ B. *Date:* _____

C. *Location of Development:* _____

D. *Type of Development:* _____ E. *Total area (acres):* _____

F. *Proposed Land Uses (CITY OF AZLE zoning designations and std.Industrial code no(s)):* _____

G. *Anticipated project schedule:* _____

H. *Name of Owner:* _____ I. *Telephone No.:* _____

J. *Owner Contact Name:* _____ K. *FAX No.:* _____

L. *Owner Address:* _____

M. *Engineer's Name:* _____ N. *Texas P.E. No.:* _____

O. *Engineering Firm:* _____ P. *Telephone No.:* _____

Q. *Engineer Address:* _____

R. *Engineer's E-mail:* _____ S. *FAX No.:* _____

2. Attachments:

_____ **Development Concept Plan (if available) or Conceptual Site or Project Layout**

_____ **Existing Conditions and Layout Map**

_____ **Concept Drainage Area Map**

For City Use: Reviewer: _____ *Date:* _____

Accepted Not Accepted *Case No.:* _____

Comments: _____

	Yes	No	N/A	Comments and Descriptions
3. Planning Concerns				
A. Have any previous drainage or watershed plans been completed in the watershed? (If yes, describe)	__	__	__	_____
B. Is there any known history of flooding or excessive erosion downstream? (If yes, describe conditions and locations)	__	__	__	_____
C. Are there any known downstream drainage constrictions such as undersized culverts on public roadways? Size?	__	__	__	_____
D. Are there any FEMA 100-year floodplains which will need flood studies, CLOMRs, LOMRs, etc., for this project?	__	__	__	_____
E. Are there any known or suspected wetlands areas, mitigation areas, 404 permit areas, or other natural habitat features which require special consideration?	__	__	__	_____
F. Are there any existing dams which are or will be subject to TCEQ regulations?	__	__	__	_____
G. Are there any existing impoundments subject to TCEQ water rights permitting? (Livestock ponds are generally exempt until converted to other uses.)	__	__	__	_____
H. Are there any existing environmental concerns on the site requiring special treatment or design consideration (i.e. fuel stations, vehicle maintenance, auto recycling, illegal dump sites, outdoor material storage, loading and transfer areas, landfills, industrial facilities, etc.)?	__	__	__	_____
4. Existing Conditions Map(s) showing the following information on or adjacent to the development site:				
A. Digital ortho-photography showing project boundaries	__	__	__	_____
B. Existing topography (normally 2-foot contours)	__	__	__	_____
C. Soil types from USDA soil surveys and/or soil borings	__	__	__	_____
D. Perennial or intermittent streams	__	__	__	_____
E. Boundaries and types of existing predominant vegetation	__	__	__	_____
F. Delineation of current FEMA floodplains	__	__	__	_____

	Yes	No	N/A	Comments and Descriptions
G. Locations of steep slopes	__	__	__	_____
H. Locations of wetlands and natural habitat areas	__	__	__	_____
I. Locations of all dams and impoundments	__	__	__	_____
J. Existing roads, buildings, and other impervious areas	__	__	__	_____
K. Existing major utilities, pipelines, and easements	__	__	__	_____
L. Location of existing conveyance systems such as storm drains, inlets, catch basins, channels, swales, and areas of overland flow	__	__	__	_____
M. Flow Paths	__	__	__	_____
N. Location and dimensions of existing channels, bridges or culvert crossings	__	__	__	_____
5. Does this development provide opportunities for Low-Impact Design?				
A. Preserve floodplains and natural valley storage?	__	__	__	_____
B. Preserve natural streams and drainage patterns?	__	__	__	_____
C. Preserve steep slopes?	__	__	__	_____
D. Preserve trees and undisturbed natural vegetation?	__	__	__	_____
E. Preserve wetlands and other natural features?	__	__	__	_____
F. Drain runoff to pervious areas?	__	__	__	_____
G. Utilize natural drainage vs. storm drain systems?	__	__	__	_____
H. Reduce pavement and other impervious covers?	__	__	__	_____
6. Conceptual analysis of hydrologic and hydraulic impacts of the proposed development:				
A. Hydrologic analysis to determine conceptual rates of runoff, volumes, and velocities to support decisions related to flood control and erosion protection downstream.	__	__	__	_____

	Yes	No	N/A	Comments and Descriptions
B. *Conceptual estimates of the 1-, 10- and 100-year storm frequency impact analysis.*	__	__	__	_____
C. *Conceptual selection, location, and size of proposed storm water structural controls.*	__	__	__	_____
D. *Conceptual limits of proposed clearing and grading.*	__	__	__	_____
E. *Preliminary identification of Stormwater credits.*	__	__	__	_____

7. Concept Drainage Area Map(s) showing the following information for the development site:

A. *Conceptual street layout (scale 1"=200')*	__	__	__	_____
B. *All off-site drainage areas with topography (reduced scale)*	__	__	__	_____
C. *Delineation of watershed boundaries with flow arrows*	__	__	__	_____
D. *Reference info (file number, etc.) for previous drainage studies or existing developments & drainage facilities*	__	__	__	_____
E. *Approximate zone of influence for all outfalls*	__	__	__	_____
F. *Downstream constrictions, flooding, or erosion locations*	__	__	__	_____
G. *Location of proposed structural storm water controls, if any*	__	__	__	_____

(seal)	I certify that this Conceptual Storm Water Management plan, including this checklist, required attachments, and additional comments, was prepared under my responsible supervision and that the information presented on this checklist and attachments is correct to the best of my knowledge. I also understand that an acceptance of this plan by the City does not waive any City standards or requirements unless a specific waiver request has been submitted and approved. Signed _____ Date _____ Print Name:_____

ENGINEER'S CHECKLIST FOR PRELIMINARY iSWM SITE PLAN

Please attach additional sheets as necessary for comments and descriptions.
Fold all sheets to 8½" x 11" or 9" x 12" and bind with a clip.

1. Project Information (for Items 1.C to 1.Q, N/C = No Change from Conceptual SWM Plan)

A. *Name of Development:* _____ B. *Date:* _____

C. *Location of Development:* _____

D. *Type of Development:* _____ E. *Total area (acres):* _____

F. *Proposed Land Uses (CITY OF AZLE zoning designations):* _____

G. *Anticipated project schedule:* _____

H. *Name of Owner:* _____ I. *Telephone No.:* _____

J. *Owner Contact Name:* _____ K. *FAX No.:* _____

L. *Owner Address:* _____

M. *Engineer's Name:* _____ N. *Texas P.E. No.:* _____

O. *Engineering Firm:* _____ P. *Telephone No.:* _____

Q. *Engineer Address:* _____

R. *Engineer's Email:* _____ S. *FAX No.:* _____

2. Attachments:

_____ **Preliminary Plat or Site Plan**

_____ **Concept Storm Water Mgmt. Plan** (with Exhibits)

_____ **Preliminary Project Layout Map**

_____ **Preliminary Drainage Area Map**

For City Use: Reviewer: _____ *Date:* _____
Accepted Not Accepted *Case No.:* _____
Comments: _____

Form CITY OF AZLE-2

3. Changes or Modifications to Concept Storm Water Management Plan (May be reprinted with changes tracked or highlighted)

_____

_____

_____

	Yes	No	N/A	Comments and Descriptions
4. Preliminary Project Layout Map(s) showing the following information on or adjacent to the development site:				
A. *Digital ortho-photography showing project boundaries*	__	__	__	_____
B. *Existing topography (normally 2-foot contours)*	__	__	__	_____
C. *Preliminary street and lot layout*	__	__	__	_____
D. *Benchmarks used for site control*	__	__	__	_____
E. *Construction phasing plan, if applicable*	__	__	__	_____
F. *Limits of proposed clearing and grading*	__	__	__	_____
G. *Proposed dams (attach Dam Safety Checklist)*	__	__	__	_____
H. *Proposed FEMA floodplains with flood study reference info*	__	__	__	_____
I. *Proposed ponds subject to TCEQ water rights permits*	__	__	__	_____
J. *If yes, has water rights permit been applied for?*	__	__	__	_____
5. Drainage Area Map(s) showing the following information for the development site:				
A. *Preliminary street and lot layout (scale 1”=200’)*	__	__	__	_____
B. *All off-site drainage areas with topography (reduced scale)*	__	__	__	_____
C. *Delineation of watershed boundaries with flow arrows*	__	__	__	_____
D. *Proposed modifications to watershed boundaries*	__	__	__	_____

	Yes	No	N/A	Comments and Descriptions
E. *File numbers for existing developments & drainage facilities*	__	__	__	_____
F. *Zoning or Comp Plan info to document off-site land use*	__	__	__	_____
G. *Preliminary hydrology with supporting data & calculations for on-site existing & proposed, & off-site ultimate conditions*	__	__	__	_____
H. *Proposed detention ponds or other storm water controls, with summary hydrology for all applicable design storms*	__	__	__	_____
I. *Delineate entire zone of influence for all outfalls*	__	__	__	_____
J. *Downstream constrictions, flooding, or erosion locations*	__	__	__	_____
K. *Proposed facilities with private maintenance (Maintenance Agreement and Maintenance Plan required for final)*	__	__	__	_____

6. Determination of Adequate Outfalls and Zones of Influence: Describe these and provide supporting methodology:

_____

_____

_____

_____

_____

_____

_____

7. Other Comments:

_____

_____

_____

_____

(seal)	I certify that this Preliminary Storm Water Management plan, including this checklist, required attachments, and additional comments, was prepared under my responsible supervision and that the information presented on this checklist and attachments is correct to the best of my knowledge. I also understand that an acceptance of this plan by the City does not waive any City standards or requirements unless a specific waiver request has been submitted and approved. Signed _____ Date _____ Print Name:_____

ENGINEER'S CHECKLIST FOR FINAL iSWM SITE PLAN

Please attach additional sheets as necessary for comments and descriptions.
Fold all sheets to 8½" x 11" or 9" x 12" and bind with a clip.

1. Project Information (for Items 1.C to 1.Q, N/C = No Change from Preliminary SWM Plan)

A. *Name of Development:* _____ B. *Date:* _____

C. *Location of Development:* _____

D. *Type of Development:* _____ E. *Total area (acres):* _____

F. *Proposed Land Uses (CITY OF AZLE zoning designations):* _____

G. *Anticipated project schedule:* _____

H. *Name of Owner:* _____ I. *Telephone No.:* _____

J. *Owner Contact Name:* _____ K. *FAX No.:* _____

L. *Owner Address:* _____

M. *Engineer's Name:* _____ N. *Texas P.E. No.:* _____

O. *Engineering Firm:* _____ P. *Telephone No.:* _____

Q. *Engineer Address:* _____

R. *Engineer's Email:* _____ S. *FAX No.:* _____

2. Attachments:

_____ **Final Plat or Site Plan**

_____ **Conceptual Storm Water Mgmt. Plan** (with Exhibits)

_____ **Preliminary Storm Water Mgmt. Plan** (with Exhibits)

_____ **Additional Attachments as Specified Below**

For City Use: Reviewer: _____ *Date:* _____

Accepted Not Accepted *Case No.:* _____

Comments: _____

Form CITY OF AZLE-3

3. Changes or Modifications to Preliminary Storm Water Management Plan (May be reprinted with changes tracked or highlighted)

_____

_____

_____

	Yes	No	N/A	Comments and Descriptions
4. Additional Study Attachments (include if applicable)				
A. *Dam Safety Checklist*	__	__	__	_____
B. *Executed Maintenance Agreement (with Maintenance Plan)*	__	__	__	_____
C. *Landscaping Plan (for Storm Water controls)*	__	__	__	_____
5. Applicable Local, State and Federal Permits (Indicate acquired or application pending)				
A. *CLOMR, LOMR or LOMA*	__	__	__	_____
B. *TCEQ water rights permit*	__	__	__	_____
C. *404 permit*	__	__	__	_____
D. *Other:* _____	__	__	__	_____
E. *Other:* _____	__	__	__	_____
6. Hydrologic Analysis and Storm Water Management Design Plan (separate Attachment, either A or B)				
A. *Approved DOE Infrastructure Plans (with TPW CFA). Attach a copy of the signed cover sheet.*	__	__	__	_____
B. *Site SWM Plan showing final hydrology, Identification of all stormwater controls with summary calculations, delineation of adequate outfalls, zones of influence, required mitigation, and structural details and specifications as required*	__	__	__	_____

	Yes	No	N/A	Comments and Descriptions
7. iSWM Construction Plan				
A. *Existing topography and natural drainage features and post -development topography and drainage features*	__	__	__	_____
B. *Limits of disturbance, including off-site areas that will be disturbed and natural features to be protected within the disturbed areas*	__	__	__	_____
C. *Location, details, BMP design calculations (if applicable), and notes for erosion controls*	__	__	__	_____
D. *Location, details, BMP design calculations (if applicable), and notes for sediment controls*	__	__	__	_____
E. *Location, details, BMP design calculations (if applicable), and notes for waste controls*	__	__	__	_____
F. *Inspection and maintenance notes*	__	__	__	_____
G. *Sequence of BMP installation based on sequence of construction phases*	__	__	__	_____
H. *Schedule and phasing of temporary and permanent stabilization on different area of the site*	__	__	__	_____
I. *Temporary structures that will be converted into permanent storm water controls*	__	__	__	_____
J. *If final site drains 10 or more acres are sediment traps being used?*	__	__	__	_____
K. *Are top soils banked on-site. If not are provisions made for soil amendments.*	__	__	__	_____
L. *Prepared by an engineer or other qualified professional*	__	__	__	_____
8. Landscaping Plan				
A. *Arrangement of planted areas, natural areas, and other -landscaped features*	__	__	__	_____
B. *Information required to construct landscaping elements*	__	__	__	_____

	Yes	No	N/A	Comments and Descriptions
C. Descriptions and standards for methods, materials\ And vegetation that are to be used	__	__	__	_____

(Seal)	I certify that this Final Storm Water Management plan, including this checklist, required attachments, and additional comments, was prepared under my responsible supervision and that the information presented on this checklist and attachments is correct to the best of my knowledge. I also understand that an acceptance of this plan by the City does not waive any City standards or requirements unless a specific waiver request has been submitted and approved. Signed _____ Date _____ Print Name:_____

Culvert Hydraulics Documentation Checklist

Project:							Date:		
Road:			Watershed:				Stream:		
Type of work:									
FEMA considerations (Detailed or Approx. Study?):									
Culvert location:									
Culvert size & shape:									
Culvert material:			**Fill height:**			**Skew angle:**			
Hydrologic method used: Hydrograph USGS Station _____ Other (specify) _____									
Design frequency (yrs):						**Drainage area:**			
Channel analysis:			**Channel slope (m/m):**			**N values (channel):**			
100 Yr Proposed discharge (cfs):				**100 Year Ultimate discharge - Q_{100} (cfs):**					
100 Yr Proposed tailwater (ft):				**100 Year Ultimate tailwater (ft):**					
100 YR Proposed headwater (ft):				**100 Year Ultimate headwater (ft):**					
Allowable highwater (ft):									
100 Yr Proposed velocity thru bridge (fps):				**100 Year Ultimate velocity thru bridge (fps):**					
Design unconstricted velocity (fps)				**100 Year unconstricted velocity (fps)**					
% Flow overtopping road for Q_{100}:				**Height of water over road for Q_{100} (ft):**					
Est. overtopping frequency (years):									
Headwater computation method: THYSYS-CULVERT HEC-RAS* Other _____ *Required by CITY OF AZLE									
Comparison with existing hydraulic condition:									
Meets FEMA requirements_____Yes_____No_____N/A									
Outlet velocity excessive_____Yes____No									
Outlet protection/control:									
Safety end treatment:									
Comments:									

Form CITY OF AZLE-4

Bridge Hydraulics Documentation Checklist

Project:		Date:
Road:	Watershed:	Stream:
Type of work:		
FEMA considerations (Detailed or Approx. Study?):		
Bridge Length:	Pier Configuration:	
Bridge Width:	Bridge Low Chord and Roadbed Elev.:	
Hydrologic Method Used: Hydrograph Only **Gaged - USGS Station _____** **Other_____**		
Design Frequency (yrs):*		**Drainage Area:**
Channel Dimensions:	**Channel slope(ft/ft):**	**N value:**

STATION	DESIGN PROPOSED			100 YR EXISTING			100 YR PROPOSED			100 YR ULTIMATE		
	Q (cfs)	V (fps)	WSEL (ft)	Q (cfs)	V (fps)	WSEL (ft)	Q (cfs)	V (fps)	WSEL (ft)	Q (cfs)	V (fps)	WSEL (ft)
EXIT												
FULL V												
BRIDGE												
APPR (CONSTR)												
APPR (UNCONS)												

Headwater computation method: HEC-RAS_____ OTHER_____	
Bridge/Roadway overtopping: _____Yes _____No	Overtopping Frequency(years):
% Flow overtopping road:	**Height of water over road(ft):**
Existing Bridge Length(ft):	Meets FEMA requirements: Yes_____No_____N/A
Type of Bridge Rail:	Skew:
Abutment protection (rock riprap, etc):	
Comments:	
***Complete for cases where "design frequency" (such as TxDOT structures) may be different than 100-year.**	

Form CITY OF AZLE-5

PRELIMINARY AND FINAL
DAM MAINTENANCE AND
EMERGENCY ACTION PLAN

Please attach additional sheets as necessary for comments and descriptions.
Fold all sheets to 8½" x 11" or 9" x 12" and bind with a clip.

1. Project Information

A. Name of Development: _____ *B. Case No.:* _____

C. Dam Name, Number or Tributary: _____ *D. Date:* _____

E. Name of Owner: _____ *F. Telephone No.:* _____

G. Owner Contact Name: _____ *H. E-mail:* _____

I. Owner Address: _____

J. Engineer's Name: _____ *K. Texas P.E. No.:* _____

L. Engineering Firm: _____ *M. Telephone No.:* _____

N. Engineer Address: _____ *O. E-mail:* _____

2. Dam Summary Information (Item H not required for Preliminary Submittal)

A dam that meets the TCEQ guidelines must be registered with the TCEQ, have a breach analysis, hazard assessment, and emergency action plan per 30 TAC §299.

A. Dam height (feet):* _____

B. Impoundment surface area (acres): _____

C. Watershed size (acres): _____

D. Approx. impoundment volume (acre-feet): _____

Accepted Not Accepted Case No.: _____

Comments: _____

_____

For City Use: Reviewer: _____ *Date:* _____

*Height measured from the crest of the dam to the bottom of the outfall channel

Form CITY OF AZLE-6

E. Who will own and maintain dam (HOA, City park, etc.)? _____

F. Was dam previously registered and/or inspected by TCEQ? When? _____

G. TCEQ Impoundment size classification (30 TAC §299.12): ____ *Exempt* ____ *Small* ____ *Intermediate* ____ *Large*

H. Hazard Assessment (from 6.B. below per 30 TAC §299.13): ____ *N/A* ____ *Low* ____ *Significant* ____ *High*

***3.* Attachments**

_____ **Water Rights Permit (where applicable)**

_____ **Breach Analysis (where applicable)**

_____ **Emergency Action Plan (final submittal)**

	Yes	No	N/A	Comments and Descriptions
***4.* State Water Rights**				
In accordance with Texas Water Code §11, all surface impoundments not used for domestic or livestock purposes must obtain a water rights permit from the TCEQ. For proposed City-owned dams, a completed permit, or written documentation from TCEQ stating that a permit is not required, must be submitted prior to final acceptance by the City.				
Has water rights permit been obtained or applied for? (For proposed City-owned dams, attach permit correspondence)	__	___	___	
5. Dam and Pond Site Map(s), showing:				
A. Proposed and existing contours, with recent aerial	__	___	___	_____
B. Existing and proposed FEMA floodplain limits	__	___	___	_____
C. Street and lot layout around dam and inundation area	__	___	___	_____
D. Contributing watershed (reduced scale if necessary)	__	___	___	_____
E. Hydrologic calculations for Q100 and PMF	__	___	___	_____
F. Location, size and capacity of proposed spillway	__	___	___	_____
G. Conceptual or final spillway and erosion protection design	__	___	___	_____

	Yes	No	N/A	Comments and Descriptions
6. Dam Breach Analysis – Attach and Include: (Required for Final Submittal only, for dams meeting the guidelines in Chapter 3 "Detention Structures" of the CITY OF AZLE iSWM Criteria Manual.				
A. Breach analysis for "sunny day", "barely overtopping" or Q100, and Probable Maximum Flood (PMF) conditions	__	___	___	_____
B. Hazard Assessment based on potential for loss of life or property damage in breach/non-breach comparison	__	___	___	_____
C. Emergency Action Plan per current City standards	__	___	___	_____

(seal)	I certify that this Conceptual Storm Water Management plan, including this checklist, required attachments, and additional comments, was prepared under my responsible supervision and that the information presented on this checklist and attachments is correct to the best of my knowledge. I also understand that an acceptance of this plan by the City does not waive any City standards or requirements unless a specific waiver request has been submitted and approved. Signed _____ Date _____ Print Name:_____

ENGINEER'S CHECKLIST FOR STORMWATER FACILITY MAINTENANCE AGREEMENT

Please attach additional sheets as necessary for comments and descriptions.

Fold all sheets to 8½" x 11" or 9" x 12" and bind with a clip.

	Yes	_ No	N/A	Comments/Descriptions
1. Legal Agreement – Standard agreement form provided by Department of Law.	___	___	___	_____
2. Exhibit "A" - Legal Description (Attached)				
A. Meets and Bounds.	___	___	___	_____
B. Surveyor's Drawing, with seal affixed and marked as "Drainage Easement".	___	___	___	_____
C. Preliminary Plat.	___	___	___	_____
3. Exhibit "B" - Design Plan and Specifications (Attached)				
A. Design Calculations – in accordance with iSWM.	___	___	___	_____
B. Schematic Plan (See Example Detention Plan Schematic)- prepared in accordance with approved construction plans:	___	___	___	_____
• Plan View showing critical structural elements .	___	___	___	_____
• Critical structural elements are clearly labeled in layman terms.	___	___	___	_____
• Profile including a longitudinal section showing all critical structural elements with elevations.	___	___	___	_____
• Cross-sections as needed to show size and general grading.	___	___	___	_____

C. Landscaping shown per approved Landscape Plans. ___ ___ ___ _____

4. Exhibit "C" - Operations and Maintenance Plan (Attached)

A. Routine Maintenance Specifications:

1. Mowing as needed to control weeds and woody plants. ___ ___ ___ _____
2. Trash removal from critical structural elements. ___ ___ ___ _____
3. Additional maintenance. ___ ___ ___ _____

B. Non-routine Maintenance Activities:

1. Bank repair and stabilization. ___ ___ ___ _____
2. Re-vegetation - required when 30% or more of area is unprotected. ___ ___ ___ _____
3. Sediment removal from the detention/retention facility when: ___ ___ ___ _____
   - Detention basin – when water depth is reduced 25% or more, or basin does not drain within 72 hours. ___ ___ ___ _____
   - Retention pond – when water depth is 4' or less. ___ ___ ___ _____
   - Sediment traps/forebay – when depth is reduced by 50% or more. ___ ___ ___ _____
4. Structural repair/replacement for all damaged or deteriorated structures, trickle channel, trash rack, etc. ___ ___ ___ _____
5. Mechanical equipment repairs. ___ ___ ___ _____
6. Other maintenance Activities. ___ ___ ___ _____

5. Exhibit "D" - Maintenance Checklist *

A. Covers ordinary needs, in layman terms. ___ ___ ___ _____

B. Structural components labeled consistent with Schematic Plan. ___ ___ ___ _____

*See attached Inspection Checklist for Detention Basin

(seal)	I certify that this Stormwater Facility Maintenance Agreement, checklist, required attachments, and additional comments, was prepared under my responsible supervision and that the information presented on this checklist and attachments is correct to the best of my knowledge. I also understand that an acceptance of this plan by the City does not waive any City standards or requirements unless a specific waiver request has been submitted and approved. Signed _____ Date _____ Print Name:_____

GRADING PERMIT

Applicant to Complete Sections II through V Below: Permit No. _____

Permit For: Construction or Grading activities disturbing 0.1 acre or more, or if disturbed surface areas are located within floodplain and/or Drainage Easement.

I. Case No. _____(Filled out by the CITY OF AZLE)

II. Identification:

Project Name: _____

Project Location: _____

Owner:

Name:_____ e-mail: _____

Address: _____ Phone:_____

Contractor:

Name:_____

Address: _____

Emergency Telephone No.: _____ e-mail: _____

III. Size of Land Disturbance (Area Under Construction)

__0.1-0.49 acres __0.5-0.99 acres __1.0 acres or greater __Floodplain __Drainage Easement

IV. Items to be Provided by Applicant, if Applicable

___Simplified Site Drainage Plan ___Floodplain Permit ___Grading Plan ___Final iSWM Plan

___SWPPP

V. Conditions of Approval

Approval is contingent upon compliance with City grading and development requirements including drainage, floodplain management, and construction runoff control. A site grading plan sealed by an engineer is required for all land disturbances of 0.5 acres or more.

VI. Signature of Applicant or Authorized Agent:

Signature:_____

Name of Company: _____

Address: _____

Phone No.: _____

VII. City Action:

Reviewer _____ Date _____

Accepted / Not Accepted Comments _____

Form CITY OF AZLE-8

FINAL GRADING CERTIFICATE

Effective Date_____ **Case No.** (*From Grading Permit*)_____

This certification is required after construction and grading activities are complete and prior to Certificate of Occupancy being issued.

OWNER/ DEVELOPER/ PERMITTEE INFORMATION

Project Name _____

Project Location _____

Project Description _____

_____

_____

Owner/Developer/Permittee _____

Address _____

Phone No _____ e-mail _____

DESIGN PROFESSIONAL OR CONTRACTOR (Responsible Party)

Name_____

Address _____

Phone No _____ e-mail _____

License/Certificate No _____ Expiration Date _____

To the best of my knowledge and personal inspection, the above described project has been constructed in substantial compliance with the plans dated_____ as approved by the City of Azle AND temporary BMPs have been removed.

Signature_____ Date _____

Printed Name _____

(Seal)

Appendix B – City of Azle Stormwater Computer Models

In addition to Stormwater Computer Models listed in the 2010 *i*SWM Manual, the City of Azle accepts appropriately applied versions of the following computer models.

1. STORMCAD and GeoPac by Bentley for analysis and design of storm sewer.

2. Gabion Design Programs by Maccaferri:

    a. Macra 1 for Channel Design

    b. GawacWIN for Retaining Wall Design

3. SWFHYD (formerly NUDALLAS) by Azle District, U.S. Army Corps of Engineers for hydrologic routing studies (use only where model currently exists).

4. InfoWorks by MWH Soft for complex dynamic routing applications.

Appendix C – Sediment and Erosion Control Guidelines for Small Sites

SEDIMENT AND EROSION CONTROL GUIDELINE FOR SMALL SITES

As a builder, you are responsible for controlling soil and sediment on your job site during construction. This fact sheet provides some general guidelines that may be used for sites that involve construction activity that disturbs less than one acre of soil and are not required to obtain a Construction Stormwater Permit, but have the potential to discharge sediment and other non-stormwater discharges prohibited by city ordinance.

PERIMETER CONTROLS

Perimeter controls are used to capture sediment before it leaves the construction site. These types of controls include vegetative buffers, silt fencing, sediment traps and sediment logs. Sediment traps are small storm water detention areas that allow sediment to settle out of runoff. A type of trap shown below (see sketch below) is called a cut-back curb. Cut-back curbs are small traps used to pond water behind the curb and gutter system. Frequent monitoring and maintenance of sediment traps is needed to ensure that deposited sediment doesn't reduce their capacity.

INLET PROTECTION

The purpose of inlet protection devices is to reduce the amount of sediment carried into the storm drain system. The device slows runoff and filters out sediment particles at the storm drain. Inlet protection devices are the last line of defense for capturing sediment and should only be used if no other control measures are adequate as they can cause property damage due to flooding if not frequently inspected and maintained.

STABILIZED CONSTRUCTION EXIT

A stabilized construction exit is used to reduce the amount of sediment tracked from a site onto the street by vehicles or equipment. A stabilized construction exit is typically made by creating a driveway from 1.5" or larger aggregate on top of a geotextile mat located where vehicles or equipment exit the site.

TEMPORARY COVER

Temporary cover is used to reduce erosion and should be applied immediately to areas where construction activity has ceased and is not planned to resume within 21 days or to temporary stockpiles of materials stored on site. Stockpiled material consists of gravel, sand, excavated soil, topsoil or any other similar material. These piles should never be placed where storm water is conveyed (e.g., curb and gutter, drainage ditch).Temporary cover may be obtained by planting fast-growing plants like rye, oats, or winter wheat, or it may be obtained by spreading straw, wood chips, erosion control blankets or geotextile fabric over the area.

WASTE DISPOSAL

All waste and construction debris should be properly stored to prevent spills, leaks or discharges and to protect it from being carried away from the site by wind or water. All waste and debris should be properly disposed of in compliance with local, state and federal regulations.

CONCRETE WASH WATER

Concrete wash water must never be discharged or allowed to drain into the storm drain or adjacent properties. Wash water disposal must be limited to a defined area of the site or to an area designated by the developer for cement washout. The area must be sufficient to contain all wash water and residual cement.

INSPECTIONS AND HOUSEKEEPING

To ensure your control measures are in good condition and working properly, they should be inspected weekly and after any storm event. Good housekeeping should be practiced at all times. Housekeeping includes cleaning and maintaining all erosion and sediment control devices, cleaning sediment off streets, and picking up all debris that has been deposited off site by wind or water. Soil or sediment that has been deposited or tracked onto any street should be removed by the end of the day or before the next rain event.

REMOVAL OF EROSION CONTROLS

Erosion control devices should remain in place and maintained until permanent vegetation is established. Once permanent vegetation is established, the control measures can then be removed.

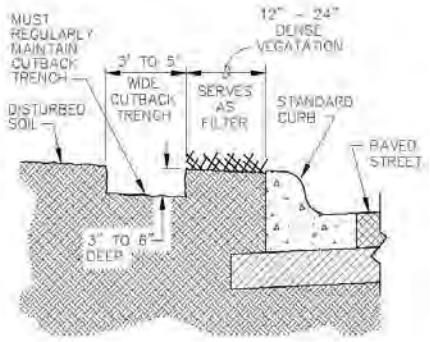

SECTION UNDERCUT LOT
NOT TO SCALE

Appendix D – Single Family Residential Lot Drainage

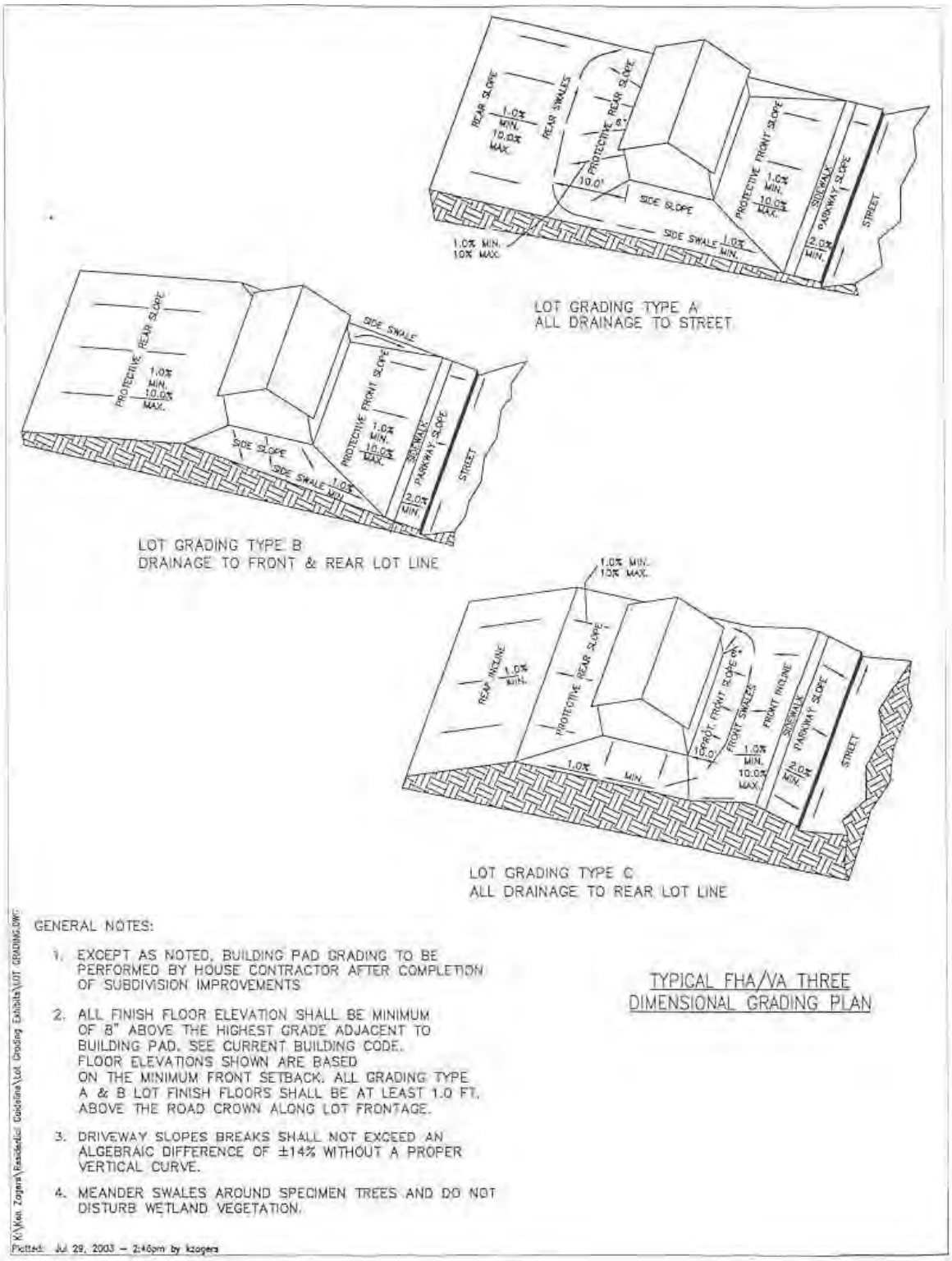

Single Family Residential Lot Drainage Types
(Federal Housing Administration,
Land Planning Bulletin No. 3)

Block Grading Types

(Source: Federal Housing Administration Land Planning Bulletin No. 3)

Block Grading Type 1 has a ridge along the rear lot lines and each lot is graded to drain surface water directly to the street independent of other properties. It is the most simple and desirable type of block grading. Topography, however, will often require other types of block grading types.

Block Grading Type 2 for a gentle cross-slope involves drainage of some surface water from lots of the high side of the block across the lower tier of lots. Difficulties are not encountered, however, if slopes are gentle and if the water always drains over short routes to the streets and does not concentrate or accumulate in volume at any point inside the block.

Block Grading Type 3 for steep cross-slopes and Type 4 for a valley along rear lot lines require special provision for block drainage and erosion control.

Erosion is controlled by provision of intercepting drainage swales in easements at the top of the rear lot incline or at intermediate locations along it, and by treatment of the steep slope itself.

Drainage easements in Block Types 3 and 5 must have alignment, width, and improvements appropriate for the expected use and maintenance. Assurance of a permanent outfall is essential. The easements must be permanently established by proper legal methods, with continuous maintenance assured by public authority, property-owners' association or individual owners, as appropriate to the situation. Walls, buildings and any other obstructions to drainage flow, such as dense planting or tight fencing, must be legally prohibited in the easement area.

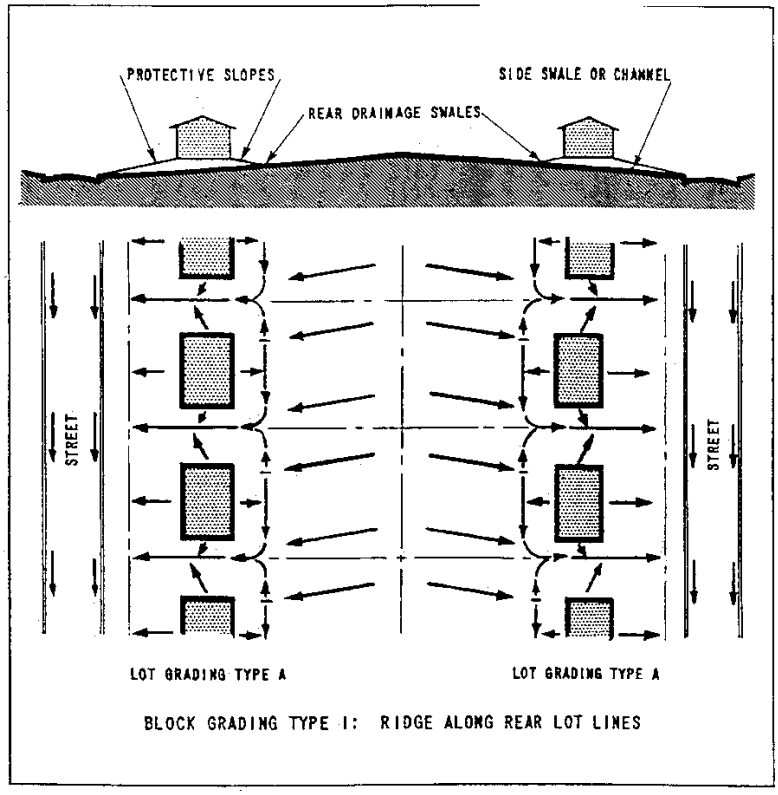

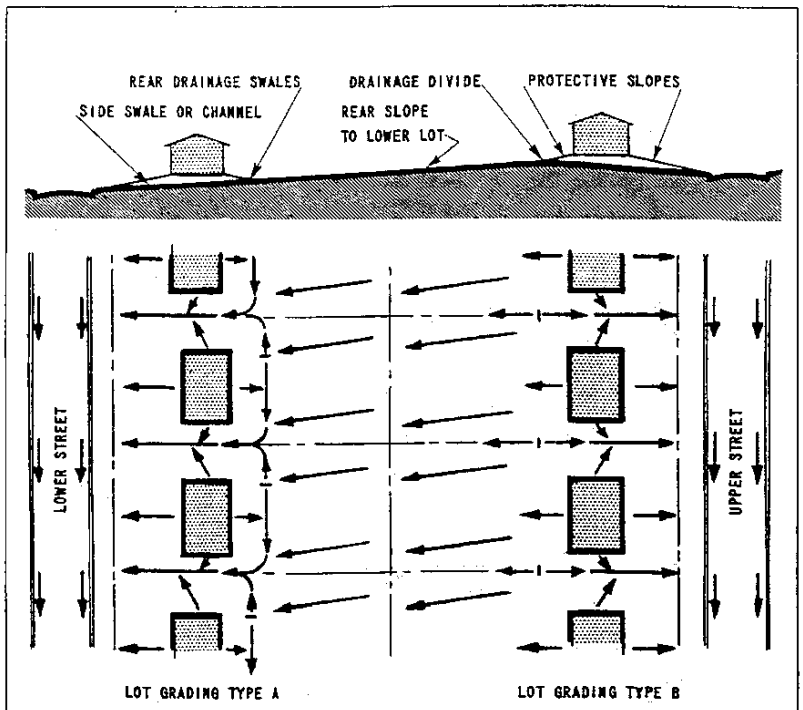

BLOCK GRADING TYPE 2: GENTLE CROSS-SLOPE

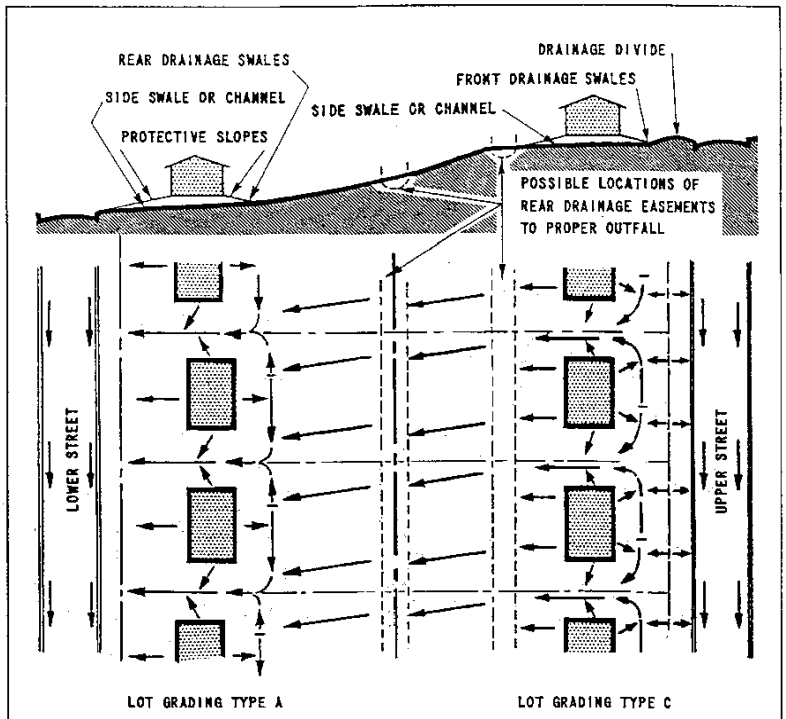

BLOCK GRADING TYPE 3: STEEP CROSS-SLOPE

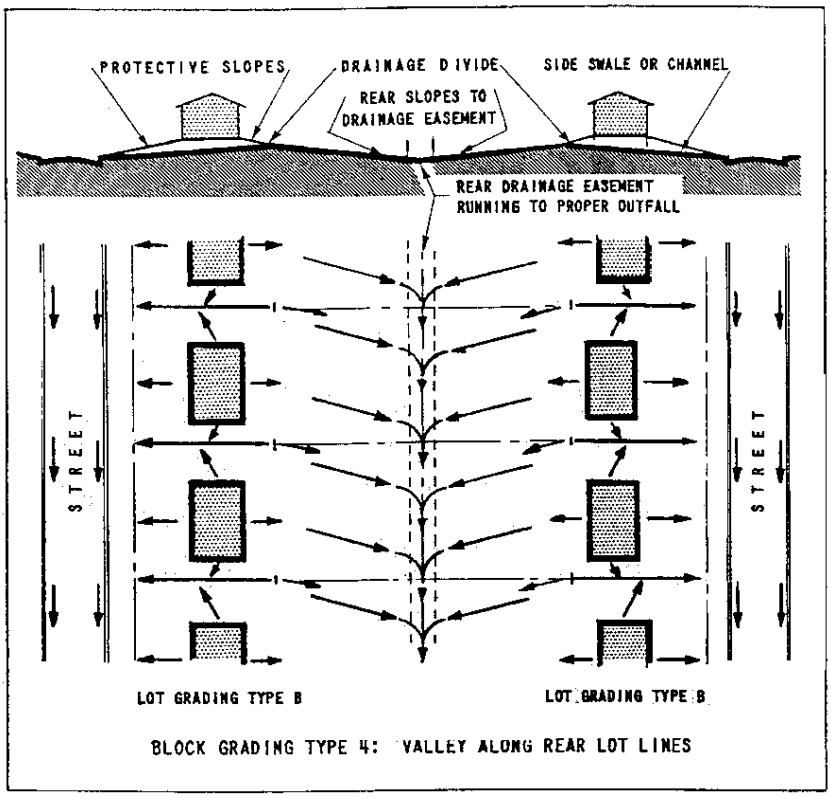

BLOCK GRADING TYPE 4: VALLEY ALONG REAR LOT LINES